ENGINEERING PLANS FOR

DME SPORTS DORMITORY

DAYTONA BEACH, FLORIDA

JULY, 2019

REVIEWED FOR CODE COMPLIANCE
SITE COPY
CITY OF DAYTONA BEACH

DEVELOPMENT REVIEW
City of Daytona Beach
APPROVAL OF: Site Plan
DATE: 1-30-20 FILE: DEV2019-128

APPROVED DEV2019-128
JAN 30 2020
DEVELOPMENT SERVICES
City of Daytona Beach

INDEX OF SHEETS

C1. COVER
C2. EXISTING CONDITIONS
C3. SATELLITE TRACT DEMOLITION PLAN
C4. SATELLITE TRACT DIMENSION PLAN
C5. SATELLITE TRACT PAVING, DRAINAGE & UTILITY PLAN
C6. OFFISTE PAVING, DRAINAGE & UTILITY PLAN
C7. STORMWATER DETAILS & SECTIONS
C8. CONSTRUCTION DETAILS
C9. CITY CONSTRUCTION DETAILS
C10. MAINTENANCE OF TRAFFIC PLAN
L-1. TREE REMOVAL CALCULATIONS
L-2. LANDSCAPING PLAN
L-3. IRRIGATION PLAN
L-4. LANDSCAPING AND IRRIGATION DETAILS
A1. ARCH. FLOOR PLAN
A2. ARCH. ELEVATIONS
S1. SURVEY
S2. SURVEY

UTILITY NOTES:

1. THE LOCATION OF ALL EXISTING UTILITIES AND SITE CONDITIONS SHOWN ON THE PLANS HAVE BEEN DETERMINED FROM BEST INFORMATION AVAILABLE, AND ARE GIVEN FOR THE CONVENIENCE OF THE CONTRACTOR. THE ENGINEER ASSUMES NO RESPONSIBILITY FOR INACCURACY. PRIOR TO THE START OF ANY CONSTRUCTION ACTIVITY, IT SHALL BE THE CONTRACTORS RESPONSIBILITY TO NOTIFY THE VARIOUS UTILITIES, AND TO MAKE THE NECESSARY ARRANGEMENTS FOR ANY RELOCATION OF UTILITIES WITH THE OWNER OF THE UTILITY. THE CONTRACTOR SHALL EXERCISE CAUTION WHEN CROSSING ANY UNDERGROUND UTILITY, WHETHER SHOWN ON THE PLAN OR LOCATED BY THE UTILITY COMPANY. ALL UTILITIES WHICH INTERFERE WITH THE PROPOSED CONSTRUCTION SHALL BE RELOCATED BY THE CONTRACTOR. THE CONTRACTOR SHALL COOPERATE WITH THE RESPECTIVE UTILITY COMPANIES DURING RELOCATION OPERATIONS. THE CONTRACTOR SHALL LOCATE AND VERIFY ALL HORIZONTAL AND VERTICAL LOCATIONS OF EXISTING UTILITIES PRIOR TO CONSTRUCTION. THE CONTRACTOR SHALL NOTIFY THE ENGINEER IN WRITING OF ANY DISCREPANCIES OR CONFLICTS PRIOR TO STARTING CONSTRUCTION.
2. ALL CONSTRUCTION & MATERIALS SHALL BE IN ACCORDANCE WITH THE LATEST AWWA STANDARD, APPROVED DEP PERMITS, AND LOCAL GOVERNMENT STANDARD PROVIDING THE UTILITY SERVICE. CONTRACTOR SHALL CALL 1-800-SUNSHINE (1-800-432-4770) PRIOR TO COMMENCEMENT OF CONSTRUCTION ACTIVITY.
3. ALL PROPOSED UTILITIES SHALL BE INSTALLED UNDERGROUND.
4. THE LOCAL GOVERNMENT PROVIDING UTILITY SERVICE SHALL BE CONTACTED 48 HOURS IN ADVANCE OF INITIATING CONSTRUCTION ON ANY EXISTING OR PROPOSED UTILITIES.
5. ALL SERVICE LATERALS TO BUILDINGS SHALL BE CLEARLY MARKED AT THE SURFACE DURING CONSTRUCTION.
6. ALL UNDERGROUND UTILITIES SHALL HAVE A MINIMUM OF THREE (3') FEET OF COVER UNLESS OTHERWISE SPECIFIED ON THE PLANS OR AS DIRECTED BY THE ENGINEER. IN ACCORDANCE WITH THE APPROVED PERMITS.
7. WHEN TRENCH EXCAVATION EXCEEDS FIVE (5') FEET IN DEPTH THE CONTRACTOR SHALL CONFORM TO OSHA STD. 29CFR SEC. 1926.65O. THE CONTRACTOR SHALL PROVIDE WRITTEN ASSURANCE OF COMPLIANCE WITH THIS LAW. A TRENCH SAFETY SYSTEM SHALL BE PROVIDED BY THE CONTRACTOR.
8. WATER SERVICES 3/4" TO 2-1/2" SHALL BE POLYETHYLENE SERVICE TUBING AND HAVE A RECOMMENDED WATER PRESSURE RATING OF 200 PSI. SERVICE SHALL HAVE A COPPER TUBE OUTSIDE DIAMETER PER ASTM D-2737 AND BE MANUFACTURED FROM VIRGIN RESIN MEETING THE REQUIREMENTS OF ASTM D-1248 AND SHALL HAVE A STANDARD DIMENSION RATION OF 9 (SDR9) AND A PLASTIC PIPE INSTITUTE RATING OF PE 3408.
9. WATER MAINS 4 INCHES AND LARGER SHALL CONFORM TO THE AWWA STANDARD FOR POLYVINYL CHLORIDE (PVC) PIPE AS OUTLINED IN THE ANSI/AWWA C900 FOR CLASS 150, DR 18. ALL ASTM STANDARD REFERENCES INCLUDED AS PART OF THE AWWA C900 STANDARD SHALL APPLY. IN ANY CASE OF CONFLICT, THE REQUIREMENTS OF THE AWWA C900 STANDARD SHALL PREVAIL.
10. DUCTILE IRON PIPE SHALL BE CLASS 150 CEMENT LINED MEETING AWWA STANDARD A21.50, A21.51 AND A21.4.
11. ALL NEW WATER LINES SHALL BE CLEANED, DISINFECTED, PRESSURE TESTED AND BACTERIOLOGICAL TESTED FOR SERVICE IN ACCORDANCE WITH THE LATEST AWWA C 600 AND C 651 AND RULE 62-555.345 F.A.C.
12. DETECTION TAPE (IF REQUIRED) ON WATER AND SEWER MAINS. SHALL BE MAGNETIC AND LOCATED 18" BELOW GRADE.
13. UNDERGROUND WATER MAINS SHALL BE SEPARATED HORIZONTALLY AND VERTICALLY FROM SANITARY SEWER MAINS, STORM SEWERS, WASTEWATER, STORMWATER FORCE MAINS, RECLAIMED WATER PIPELINES, ON-SITE SEWAGE TREATMENT, DISPOSAL SYSTEMS, SANITARY AND STORM SEWER MANHOLES PER F.S. 62-555.314(1) AND (2).
    UNDERGROUND WATER MAIN JOINTS SHALL BE SEPARATED FROM OTHER PIPELINE JOINTS PER F.S. 62-555-314(2)C. UNDERGROUND WATER MAINS SHALL BE SEPARATED FROM SANITARY OR STORM SEWER MANHOLES PER F.S. 62-555.314(3).
    UNDERGROUND WATER MAINS LAID LESS THAN THREE(3) FEET HORIZONTALLY AND CROSSING ANOTHER PIPELINE WHERE THE MINIMUM VERTICAL SEPARATION OR MINIMUM JOINT SEPARATION IS LESS THAN THAT SPECIFIED SHALL COMPLY WITH THE EXCEPTION SPECIFIED IN F.S. 62-555.314(5).
14. ROOF DRAINS, FOUNDATION DRAINS, AND OTHER CLEAN WATER CONNECTIONS TO THE SANITARY SEWER SYSTEM ARE PROHIBITED.
15. ALL SEWER CLEANOUTS IN TRAFFIC AREAS SHALL BE FLUSH WITH THE PAVEMENT. THESE SEWER CLEANOUTS SHALL HAVE BRASS CAPS W/ COUNTER SUNK SQUARE PLUGS.
16. PVC GRAVITY SEWER SHALL BE SDR 35, JOINTS SHALL BE INTEGRAL BELL ELASTOMERIC GASKET IN ACCORDANCE WITH ASTM D3212 AND ASTM F477. ALL PVC SEWER SHALL BEAR THE "NSF-DW SEAL."
17. ELECTRICAL POWER SERVICE SHALL BE UNDERGROUND MEETING THE SPECIFICATIONS OF FP&L OR THE GOVERNING UTILITY COMPANY.
18. FIRE HYDRANT PLACEMENT SHALL BE INSTALLED IN ACCORDANCE WITH THE GOVERNING MUNICIPAL REQUIREMENTS.

EROSION AND SEDIMENT CONTROL NOTES:

1. THE CONTRACTOR SHALL CONDUCT ALL ACTIVITIES WITHIN THE LIMITS OF THE PERMITTED CONSTRUCTION AREA OR PROPERTY BOUNDARY, AS APPLICABLE.
2. PRIOR TO INITIATING CONSTRUCTION ON SITE, EROSION AND SEDIMENT CONTROL MEASURES SHALL BE IMPLEMENTED. THIS SHALL INCLUDE ANY SILT SCREENING, HAY BALES OR OTHER EROSION AND SEDIMENT CONTROL MEASURES SHOWN ON THE PLANS, DESCRIBED IN THE SITE PERMITS OR OTHERWISE REQUIRED DUE TO SITE CONSTRUCTION ACTIVITIES.
3. STORM WATER PONDS AND ANY REQUIRED CONVEYANCE FACILITIES SHALL BE CONSTRUCTED IMMEDIATELY AFTER CLEARING AND ROUGH GRADING IS COMPLETED.
4. PERMANENT VEGETATIVE COVER SHALL BE ESTABLISHED WITHIN 7 DAYS OF ESTABLISHING FINISHED GRADES. OTHER FORMS OF EROSION CONTROL MAY BE APPROVED BY THE ENGINEER OR BY OTHER PERMIT CONDITIONS.
5. ALL FORMS OF EROSION CONTROL SHALL BE REMOVED AFTER CONSTRUCTION AND PRIOR TO FINAL INSPECTION.

DEMOLITION NOTES:

1. CONTRACTOR SHALL CALL 1-800-SUNSHINE (1-800-432-4770) PRIOR TO COMMENCEMENT OF CONSTRUCTION ACTIVITY.
2. AREAS OF THE SITE WITHIN THE DEMOLITION LIMITS SHALL BE CLEARED OF ALL EXISTING PHYSICAL IMPROVEMENTS TO WITHIN TWO (2') FEET OF EXISTING GRADE. FOOTINGS, UNDERGROUND PIPING & RELATED IMPROVEMENTS SHALL BE REMOVED IN THEIR ENTIRETY. CARE SHALL BE TAKEN TO PRESERVE ALL EXISTING UTILITIES AND TO PRESERVE EXISTING STRUCTURES CONTIGUOUS TO THE LIMITS OF DEMOLITION. UTILITY LOCATES SHALL BE OBTAINED PRIOR TO INITIATING ANY DEMOLITION.
3. ALL DEMOLISHED MATERIALS SHALL BE COLLECTED AND DISPOSED IN AN APPROVED MANOR. THE COST OF DEMOLITION AND DISPOSAL OF DEMOLISHED MATERIALS SHALL BE PAID BY THE CONTRACTOR.
4. AFTER DEMOLITION IS COMPLETED, THE SITE SHALL BE FILLED TO THE PROPOSED SUB GRADE ELEVATION SPECIFIED ON THE PAVING AND DRAINAGE PLANS. FILL SHALL BE PLACED IN SIX (6") LIFTS AND COMPACTED TO 95% MAXIMUM DENSITY USING THE AASHTO T-180 TEST METHOD. ISOLATED VOIDS SHALL BE FILLED AND COMPACTED IN THE SAME MANOR.
5. PRIOR TO AND DURING DEMOLITION OPERATIONS, THE CONTRACTOR SHALL MINIMIZE THE POTENTIAL FOR AIRBORNE DISPERSION OF DEMOLISHED MATERIALS, DUST, SAND AND THE LIKE.
6. ALL EXISTING SURFACE IMPROVEMENTS AND UNDERGROUND STORM DRAINAGE FOUNDATIONS SHALL BE REMOVED WITHIN THE PROJECT BOUNDARY LIMITS.

DEWATERING NOTES:

1. CONTRACTOR SHALL PERFORM DEWATERING ACTIVITIES IN STRICT ACCORDANCE WITH THE LATEST SJRWMD REQUIREMENTS, AND WITHIN PUMPING RATE THRESHOLDS ALLOWED BY SJRWMD WITHOUT REQUIRING A CONSUMPTIVE USE PERMIT.
2. ALL WATER SHALL BE PUMPED TO TEMPORARY STILLING BASINS FOR SEDIMENTATION/TURBIDITY CONTROL. STILLING BASINS SHALL HAVE FILTER CLOTH AND HAY BALES IN PLACE ALONG DOWNSTREAM LIMITS PRIOR TO DEWATERING NATURING ACTIVITIES.
3. DEWATERING ACTIVITIES SHALL NOT EXCEED 100,000 GPD ON AN ANNUAL AVERAGE BASIS.

EARTHWORK AND EMBANKMENT NOTES:

1. ALL EARTHWORK AND RELATED OPERATIONS SHALL BE PERFORMED IN ACCORDANCE WITH THE PROVISIONS OF SECTION 120 OF THE FDOT STANDARD SPECIFICATIONS FOR ROAD AND BRIDGE CONSTRUCTION, UNLESS OTHERWISE NOTED ON THE CONSTRUCTION PLANS.
2. EMBANKMENTS, BERMS, AND OTHER EARTHEN STRUCTURES SHALL BE CONSTRUCTED OF MATERIAL CONTAINING NO MUCK, STUMPS, ROOTS, BRUSH, ROCK, RUBBISH, OR OTHER MATERIAL DESIGNATED AS UNDESIRABLE.
3. EMBANKMENTS, BERMS, AND OTHER EARTHEN STRUCTURES SHALL BE COMPACTED IN SIX (6") INCH LIFTS TO A DENSITY OF 95% OF THE MAXIMUM DENSITY AS DETERMINED BY ASTM D-1557, MODIFIED PROCTOR.
4. IN FINAL SHAPING OF EARTHWORK, A TOLERANCE OF 0.25 FEET ABOVE OR BELOW THE DESIGN ELEVATIONS WILL BE ALLOWED, EXCEPT AS NOTED UNDER SECTION 120-11.2 (1 THROUGH 4) OF THE FDOT STANDARD SPECIFICATIONS FOR ROAD AND BRIDGE CONSTRUCTION.
5. NO CONSTRUCTION IS PERMITTED BEYOND THE LIMITS OF THE PROJECT BOUNDARY.

CURBING NOTES:

1. TERMINATING CURBS SHALL HAVE TRANSITIONS FROM 6" TO 0" OVER A LENGTH OF 2 FEET.
2. WHERE TERMINATING CURBS AND SIDEWALKS MEET, THE CURB SHALL TRANSITION OVER 2 FEET TO MATCH THE FINISHED ELEVATION OF THE SIDEWALK.
3. CONTRACTOR TO USE INTEGRAL CURB WITH CONCRETE PAVING SPECIFICATION OR FDOT TYPE "D" CURB WITH ASPHALT PAVING SPECIFICATION.

SITE DATA:

EXISITNG ZONING: PD-G
EXISTING FUTURE LAND USE: MIXED USE

PARKING SPECIFICATIONS:
1 SPACE PER EMPLOYEE AND 1 SPACE PER 10 STUDENTS
4 EMPLOYEES = 4 SPACES
80 STUDENTS = 80/10 = 8 SPACES
TOTAL PARKING REQUIRED = 12 SPACES (11 REG, 1 H.C.)
TOTAL PARKING PROVIDED = 33 SPACES (31 REG, 2 H.C.)

LOT SPECIFICATIONS:
TOTAL PROJECT AREA:160,892.38 S.F. = 3.69 Ac.
TOTAL WETLAND AREA: 0 S.F. = 0 Ac.

DESCRIPTION EXISTING	S.F.	Ac.	%
BUILDING:	1,731.22	0.04	1.1
PVMT/CONC:	6,032.35	0.14	3.7
TOTAL IMPERVIOUS AREA:	7,763.57	0.18	4.8
TOTAL PERVIOUS AREA:	153,128.81	3.51	95.2
TOTAL AREA:	160,892.38	3.69	100.0

DESCRIPTION PROPOSED	S.F.	Ac.	%
GROSS BUILDING FLOOR AREA: (INCLUDES EXTERIOR PORCHES AND COVERED WALKWAYS)	16,748.00	0.38	10.4
BUILDINGS: (INTERIOR FLOOR AREA UNDER AIR)	15,651.00	0.36	9.7
PVMT/CONC:	27,747.68	0.64	17.2
TOTAL IMPERVIOUS AREA:	43,398.68	1.00	26.9
SWA POND (SHWL):	11,121.12	0.25	7.0
TOTAL PERVIOUS AREA:	106,372.58	2.44	66.1
TOTAL AREA:	160,892.38	3.69	100.0

SETBACKS (REQUIRED):	SETBACKS (PROPOSED):
MIN. FRONT = 30'	FRONT = 100.96'
MIN. SIDE = 10'	SIDE = 10'
MIN. REAR = 20'	REAR = 567.03'
MAX. BUILDING HEIGHT = 45'	BUILDING HEIGHT = 20'
MAX. LOT COVERAGE = 35%	LOT COVERAGE = 27.1%

NOTES:
1. USDA NRCS SOIL TYPE: 08 BASINGER FINE SAND, HYDROLOGIC GROUP "A/D" AND 49, POMONA FINE SAND, HYDROLOGIC GROUP "A/D" USDA SOIL CONSERVATION SERVICE, VOLUSIA COUNTY
2. PARCEL LOCATED IN FLOOD ZONE "X" (AREA OF MINIMAL FLOOD HAZARD) AS SCALED FROM FLOOD INSURANCE RATE MAP, VOLUSIA COUNTY, FL. PANEL #362 OF 930 MAP #12127C0362H, DATED SEPTEMBER 19, 2017.
3. TAX PARCEL NUMBER(S): 5239-00-00-0610; 5239-00-00-0611
4. SITE ADDRESS: 2501 BELLEVUE AVE., DAYTONA BEACH, FL 32114

GENERAL NOTES:
1. BOUNDARY AND TOPOGRAPHIC SURVEYS PERFORMED BY MYER LAND SURVEYING, INC. JOB 19177, DATED 6/10/19, BEARING BASIS FLORIDA EAST ZONE, STATE PLANE COORDINATE SYSTEM 83(86) AND ELEVATIONS ARE BASED ON N.A.V.D DATUM OF 1988.
2. AREAS WITHIN THE PUBLIC RIGHT-OF-WAY AND OFF SITE WHICH HAVE BEEN DISTURBED BY CONSTRUCTION SHALL BE CLEARED OF ALL DEBRIS, REGRADED AND SODDED W/ BAHIA SO AS TO RESTORE THE AREA TO A STABILIZED AND PLANTED STATE.
3. ALL MATERIALS (PIPES, STRUCTURES, ETC.) AND CONSTRUCTION METHODS SHALL BE IN ACCORDANCE WITH THE LATEST EDITION OF THE "FDOT STANDARD SPECIFICATIONS FOR ROADWAY AND BRIDGE CONSTRUCTION", THE "FDOT ROADWAY AND TRAFFIC DESIGN STANDARDS", AND THE "FLORIDA BUILDING CODE 2017".
4. SIDEWALK SPECIFICATIONS:
    4" FDOT CLASS 1 PORTLAND CEMENT CONCRETE (2500 PSI @ 28 DAYS)
    W/ 6" CLEAN STABILIZED SAND SUBGRADE (MIN. 95% COMPACTION PER AASHTO T-99)
    6" THICK @ DRIVEWAYS (3000 PSI @ 28 DAYS) W/ 12" SUBGRADE IN 6" LIFTS.
    EXPANSION AND CONTRACTION JOINTS SHALL BE INSTALLED IN ACCORDANCE WITH FDOT RECOMMENDATIONS.
5. ONSITE PAVEMENT SPECIFICATIONS: (ASPHALT / CONCRETE)
    CONCRETE:
    6" FDOT CLASS 1 PORTLAND CEMENT CONCRETE (3OOO PSI @ 28 DAYS
    MAX. 5" SLUMP)
    10" CLEAN STABILIZED SAND SUBGRADE (MIN. 98% COMPACTION, AASHTO T-180)
    EXPANSION AND CONTRACTION JOINTS SHALL BE INSTALLED IN ACCORDANCE WITH PCA RECOMMENDATION
    ASPHALT:
    1 1/2" SP 9.5 ASPHALTIC CONCRETE STRUCTURE COURSE (MIN. 98% COMPACTION, NUCLEAR DENSITY BACK SCATTER METHOD).
    6" LIMEROCK BASE (LBR 100 MIN. 98% COMPACTION, AASHTO T-180)
    8" STABILIZED SUBGRADE (LBR 40 MIN. 98% COMPACTION, AASHTO T-180)
6. CONTRACTOR SHALL PROVIDE VERTICAL AND HORIZONTAL "AS-BUILT" INFORMATION CONTAINING AT A MINIMUM: BUILDING LOCATION, TYPICAL PARKING STALL WIDTHS AND LENGTHS, PAVEMENT AND SIDEWALK WIDTHS, CROSS SLOPES AND DRAINAGE DIRECTIONS, BUILDING FINISHED FLOOR ELEVATION, PAVEMENT, SIDEWALK AND STORMWATER AREA SPOT GRADES, UTILITY LOCATIONS AND TOP OF PIPE GRADES. ADDITIONAL INFORMATION MAY BE NEEDED FOR CITY. A CERTIFICATION TO THIS EFFECT SIGNED AND SEALED BY A P.L.S. SHALL GO TO THE OWNER (OWNERS BANK IF REQUIRED), CITY AND ENGINEER.
7. ALL TRAFFIC CONTROL DEVICES, INCLUDING SIGNS AND PAVEMENT MARKINGS SHALL CONFORM TO THE LATEST EDITION OF THE "MANUAL ON UNIFORM TRAFFIC CONTROL DEVICES".
8. PAVEMENT SHALL BE PAINT STRIPPED AND WHEEL STOPPED AS SHOWN. WHERE NOTED, THERMOPLASTIC WITH GLASS SPHERES STRIPING SHALL BE USED. RIGHT-OF-WAY PAINT STRIPING SHALL BE THERMOPLASTIC WITH GLASS SPHERES IN ACCORDANCE WITH F.D.O.T. INDEX #17346. RIGHT-OF-WAY REFLECTIVE PAVEMENT MARKERS (RPM'S) SHALL BE INSTALLED (WHEN REQUIRED) IN ACCORDANCE WITH F.D.O.T. INDEX # 17352.
9. OWNER/ DEVELOPER: MICHAEL PINAGGIO, PRESIDENT, DIRECT MAIL EXPRESS, 2421 BELLEVUE AVENUE, DAYTONA BEACH, FL. 32114, TELEPHONE: (386) 257-2500
    CIVIL ENGINEERING: THE PERFORMANCE GROUP, INC., JOSEPH HOPKINS, 100 MARINA POINT DR., DAYTONA BEACH, FL 32114, TELEPHONE: (386) 239-7166, FAX: (386) 239-7120
    SURVEYOR: MYER LAND SURVEYING, INC., MICHAEL M. MYER, 306 RIDGEWOOD AVE., HOLLY HILL, FL 32117, TELEPHONE: (386) 255-6304
    ARCHITECT: BPF DESIGN, INC., BRIAN P. FREDLEY, ASSOC. AIA, 207 FAIRVIEW AVE., DAYTONA BEACH, FL. 32114, TELEPHONE: (386) 257-0502
    LANDSCAPE ARCHITECT: THE STERN DESIGN GROUP, P.A., JAN STERN, R.L.A., 1685 PROMENADE CIR., PORT ORANGE, FL 32129, TELEPHONE: (386) 788-3788
    WATER SEWER: CITY OF DAYTONA BEACH, 301 S. RIDGEWOOD AVENUE, DAYTONA BEACH, FL. 32114, TELEPHONE: (386) 258-3110
    ELECTRIC: FLORIDA POWER & LIGHT CO., 3000 SPRUCE CREEK ROAD PORT ORANGE, FL 32127, 386-322-3414
    TELEPHONE: BELLSOUTH, 900 N. NOVA ROAD, DAYTONA BEACH, FL 32117, 386-254-8003
    GAS: TECO PEOPLES GAS, 1722 RIDGEWOOD AVE., HOLLY HILL, FL 32117, 386-671-2220
    CABLE: BRIGHT HOUSE NETWORK, 209 DUNLAWTON AVE., PORT ORANGE, FL. 32127, 386-760-9950

VICINITY MAP:

SCALE: 1" = 1,000'

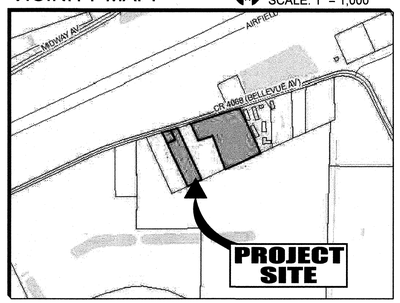

ZONING MAP:

SCALE: 1" = 400'

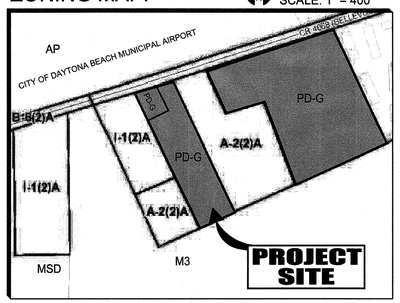

FEMA MAP:

SCALE: 1" = 500'



PROJECT DESCRIPTION:

THE SCOPE OF THE PROJECT IS TO DEMOLISH EXISTING RESIDENCE AND CONSTRUCT A NEW STUDENT DORMITORY AND RELATED SITE IMPROVEMENTS. THERE ARE 20 STUDENT UNITS TO HOUSE 4 STUDENTS EACH AND 2 STAFF UNITS TO HOUSE 2 STAFF MEMBERS EACH.

ADDRESS NOTES:

1. ADDRESS NUMBERS SHALL BE ARABIC NUMERALS. NUMBERS SHALL BE IN A COLOR CONTRASTING WITH THE STRUCTURE OR BACKGROUND SURFACE, AND NOT BE LESS THAN SIX (6) INCHES IN HEIGHT.
2. THE ADDRESS NUMBER SHALL BE AFFIXED HORIZONTALLY IN A CONSPICUOUS PLACE ON THE BUILDING SO THAT THE NUMBER IS CLEARLY LEGIBLE FROM THE STREET.

NOTE:
ALL DESIGN AND CONSTRUCTION SHALL BE IN COMPLIANCE WITH FBC 2017 WITH SUPPLEMENTS FOR MINIMUM 140 MPH WIND LOADS.

LEGAL DESCRIPTION:

The westerly 200 feet of the easterly 600 feet of the westerly 800 feet South of the DeLand-Daytona Road, of the SAMUEL WILLIAMS GRANT, in Section 39, Township 15 South, Range 32 East, according to the Public Records of Volusia County, Florida. Also described as:

The westerly 200 feet of the following described parcel as measured along the southerly line of the DeLand Road; The easterly 600 feet of the westerly 800 feet South of the DeLand-Daytona Road, of SAMUEL WILLIAMS GRANT, in Section 39, Township 15 South, Range 32 East, more particularly described as follows:

To wit: Beginning at a point in the southerly line of the Deland-Daytona Road at a point 200 feet easterly from the westerly line of said SAMUEL WILLIAMS GRANT, measured along the southerly line of said DeLandDaytona Road; Thence easterly along the southerly line of said DeLand-Daytona Road, a distance of 600 feet; Thence southerly parallel to the westerly line of the said SAMUEL WILLIAMS GRANT, to a point the on the southerly line of said SAMUEL WILLIAMS GRANT; Thence westerly along the southerly line of SAMUEL WILLIAMS GRANT, a distance of 600 feet more or less to a point which is 200 feet easterly from the westerly line of said SAMUEL WILLIAMS GRANT, measured on a line parallel to the southerly line of the DeLand-Daytona Road; Thence northerly parallel to the westerly line of SAMUEL WILLIAMS GRANT to the Point of Beginning,

Total Acreage: 3.69 Acres more of less.

CITY OF DAYTONA BEACH
VOLUSIA COUNTY, FLORIDA

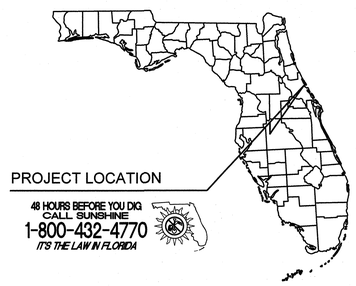

48 HOURS BEFORE YOU DIG
CALL SUNSHINE
1-800-432-4770
IT'S THE LAW IN FLORIDA

NO.	DATE	PLAN REVISION	APPROVED
1	9/23/19	REVISED PER COUNTY COMMENTS DATED 8/10/19	JHH
2	10/15/19	REVISED PER CODB COMMENTS DATED 9/25/19	JHH
3	10/23/19	REVISED PER COUNTY COMMENTS DATED 10/21/19	JHH

DME SPORTS REV. SITE PLAN #250

THE PERFORMANCE GROUP
CIVIL ENGINEERING / PLANNING / DEVELOPMENT
100 MARINA POINT DR., DAYTONA BEACH, FL. 32114
PHONE: (386)239-7166 FAX: (386)239-7120

JOSEPH HUGH HOPKINS LICENSE NO. 48089 STATE OF FLORIDA PROFESSIONAL ENGINEER

THIS ITEM HAS BEEN DIGITALLY SIGNED AND SEALED BY JOSEPH A. HOPKINS, P.E. ON THE DATE ADJACENT TO THE SEAL. PRINTED COPIES OF THIS DOCUMENT ARE NOT CONSIDERED SIGNED AND SEALED AND THE SIGNATURE MUST BE VERIFIED ON ANY ELECTRONIC COPIES.

Digitally signed by Joseph H Hopkins
DN: C=US, O=Unaffiliated, OU=A01410C0000016D83FDF4E3000437F, CN=Joseph H Hopkins
Reason: I am the author of this document
Location: 100 Marina Point Dr. Daytona Beach, FL 32114
Date: 2020-01-08 10:56:09
Foxit PhantomPDF Version: 9.6.0

BUS. CERT. LIC. 7175

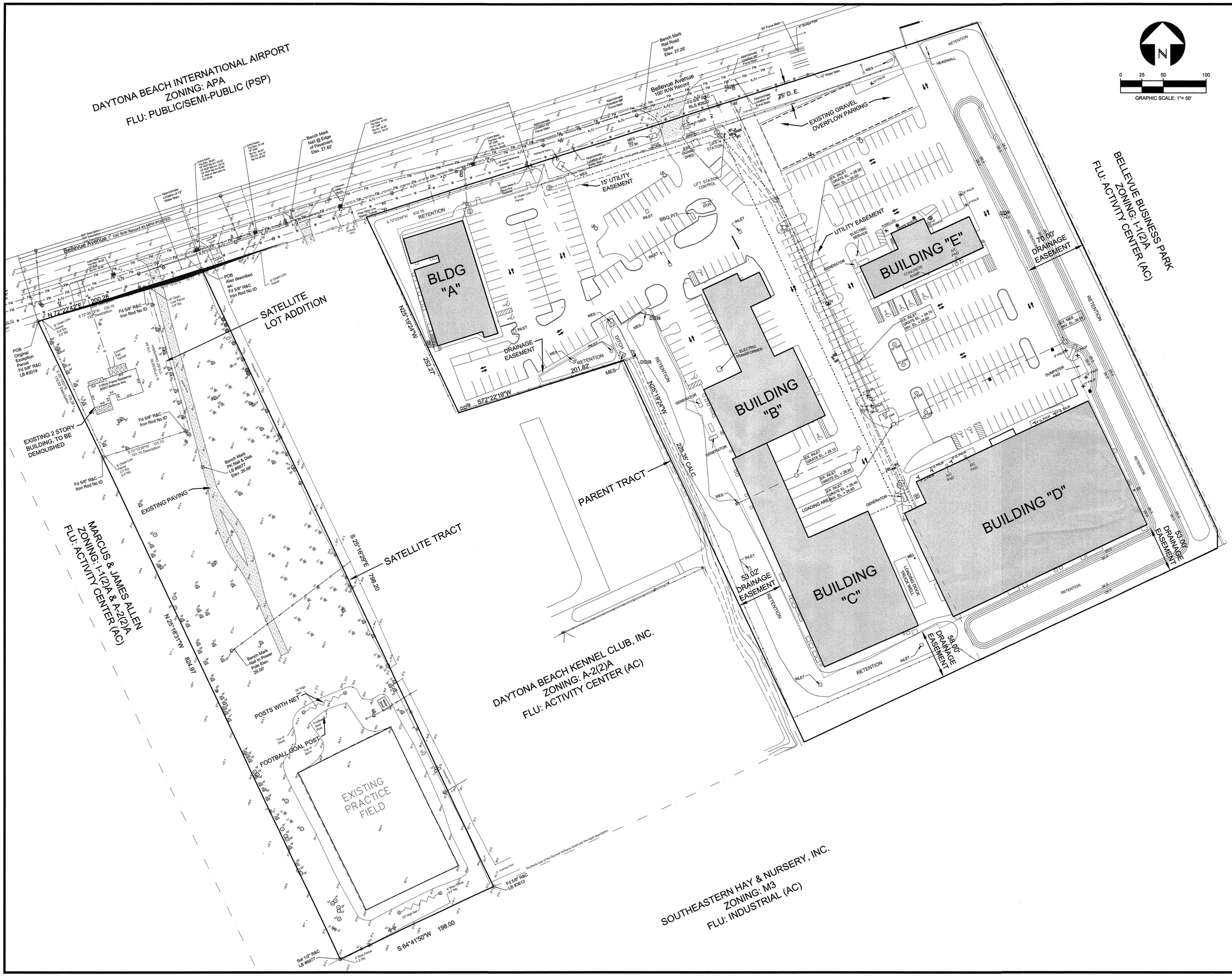

DEVELOPMENT REVIEW
City of Daytona Beach
APPROVAL OF: SP
DATE: _____ FILE: _____
DEV2019-128

APPROVED
JAN 30 2020
DEVELOPMENT SERVICES
City of Daytona Beach

NO.	DATE	APPR.	REVISION
3	10/23/19	JHH	REVISED PER COUNTY COMMENTS DATED 10/21/19
2	10/15/19	JHH	REVISED PER CODB COMMENTS DATED 9/25/19
1	9/23/19	JHH	REVISED PER COUNTY COMMENTS DATED 8/20/19

THE PERFORMANCE GROUP
CIVIL ENGINEERING / PLANNING / DEVELOPMENT

JOSEPH H. HOPKINS, P.E. NO. 48059
LICENSED BUSINESS CERTIFICATION NO. 7175
100 MARINA POINT DR. DAYTONA BEACH, FL 32114
PHONE: (386)239-7166 FAX: (386)239-7120

EXISTING CONDITIONS

DME SPORTS, LLC

NOT RELEASED FOR CONSTRUCTION

TREE LEG
- OAK
- PINE
- PALM
- HACKBERRY
- SWEETGUM
- CHINABERRY
- CHINESE TALLOW
- AUSTRAILIAN PINE

NOTE:
Number beside tree indicates diameter at 4.5' Above Grade.

All trees may not be present.

JOSEPH HUGH HOPKINS
LICENSE
NO. 48059
STATE OF FLORIDA
PROFESSIONAL ENGINEER

THIS ITEM HAS BEEN DIGITALLY SIGNED AND SEALED BY JOSEPH H. HOPKINS, P.E. ON THE DATE ADJACENT TO THE SEAL. PRINTED COPIES OF THIS DOCUMENT ARE NOT CONSIDERED SIGNED AND SEALED AND THE SIGNATURE MUST BE VERIFIED ON ANY ELECTRONIC COPIES.

Digitally signed by Joseph H Hopkins
DN: C=US, O=Unaffiliated, OU=A01410C0000016D83FDFA8F0000437F, CN=Joseph H Hopkins
Reason: I am the author of this document
Location: 100 Marina Point Dr. Daytona Beach, FL 32114
Date: 2020-01-08 10:56:56
Foxit PhantomPDF Version: 9.6.0 BUS. CERT. LIC. 7175

SCALE:	1"=50'
DESIGNED:	JHH
DRAWN:	KMP
DATE:	1/8/19
PROJECT NO.	
250	
250-REV SITE PLAN 2019 2B	
SHEET C2 OF 10	

DEVELOPMENT REVIEW
City of Daytona Beach
APPROVAL OF: SP
DATE: ______ FILE: ______
DEV2019-128

APPROVED
JAN 30 2020
DEVELOPMENT SERVICES
City of Daytona Beach

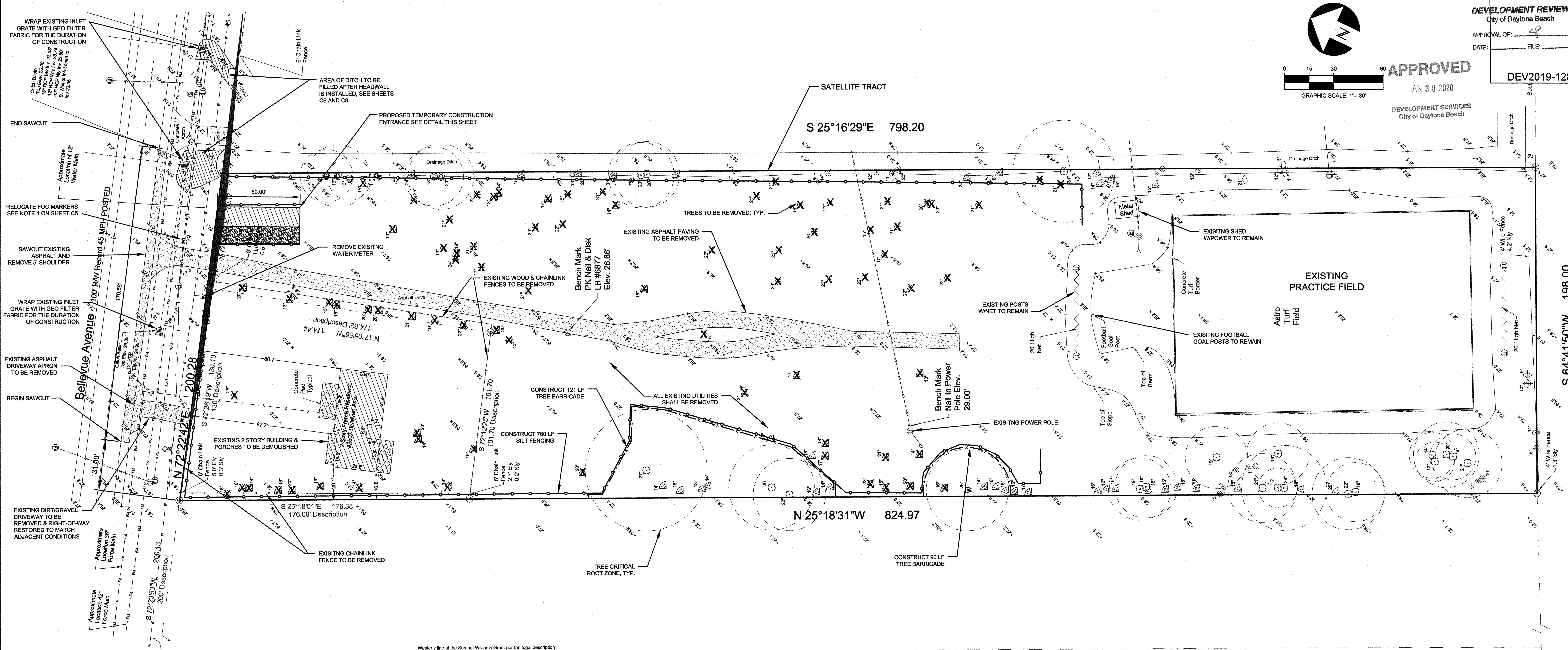

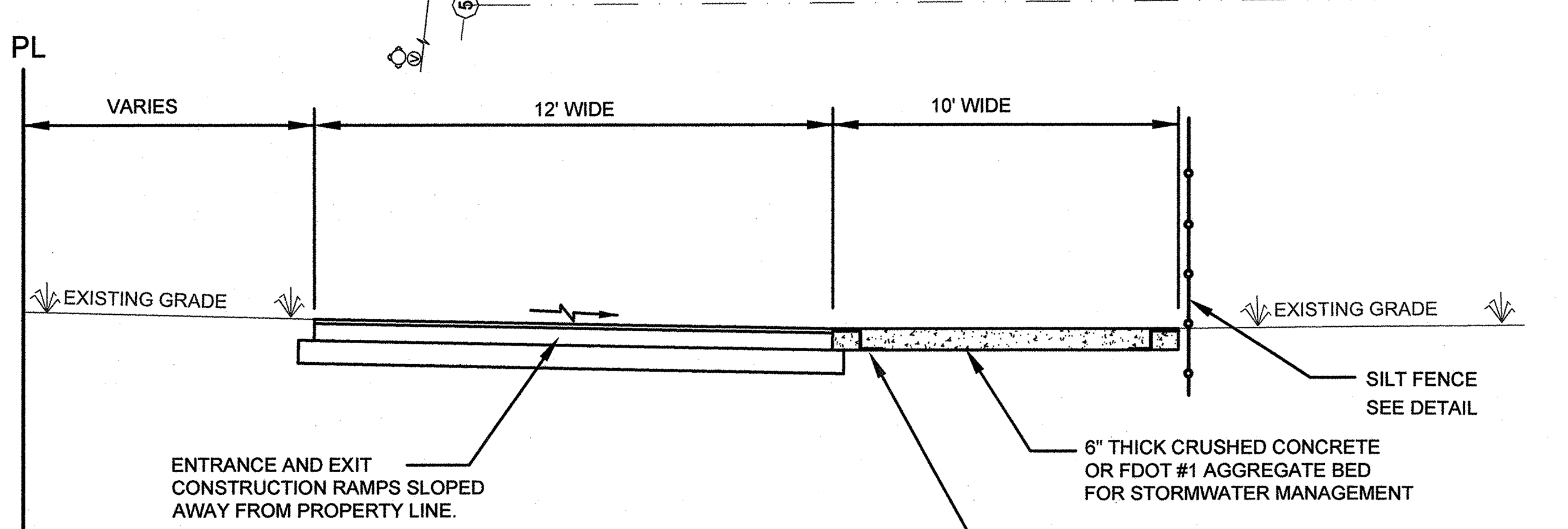

CONSTRUCTION WASH DOWN DETAIL

NOT TO SCALE

SWPPP NOTES:

STORMWATER POLLUTION PREVENTION PLAN (SWPPP):

1. STORMWATER POLLUTION PREVENTION MEASURES TO BE PRECTICED IN ACCORDANCE WITH THE DEPARTMENT OF ENVIRONMENTAL PROTECTION NPDES STORWATER DISCHARGE PERMIT REQUIREMENTS.

2. INSPECTIONS AND REPORTS OF SWPPP MEASEURES TO BE PERFORMED BY A QUALIFIED INSPECTOR (PROVIDED BY THE OPERATOR) TO INSPECT ALL POINTS OF DISCHARGE INTO SURFACE WATERS OF THE STATE OR AN MS4 (INCLUDING ON-SITE DISCHARGE TO WETLANDS AS WELL AS PROJECT OUTFALL STRUCTURES); DISTURBED AREA OF THE CONSTRUCTION SITE THAT HAVE NOT FINALLY STABILIZED; AREAS USED FOR STORAGE OF MATERIALS THAT ARE EXPOSED TO PRECIPITATION; STRUCTURAL CONTROLS; AND, LOCATIONS WHERE VEHICLES ENTER OR EXIT THE PROJECT SITE, AT LEAST ONCE EVERY SEVEN CALENDAR DAYS AND WITHIN 24 HOURS OF THE END OF A STORM THAT IS 0.50 INCHES OR GREATER AS DESCRIBED IN SECTION V.D.4a,b&c OF THE NPDES PERMIT REQUIREMENTS.

3. THE FOLLOWING NON-STORMWATER DISCHARGES MAY BE AUTHORIZED UNDER THE NPDES PERMIT PROVIDED THE NON-STORMWATER COMPONENT OF THE DISCHARGE IS IN COMPLIANCE WITH PARAGRAPH V.D.5: DISCHARGES FROM FIRE HYDRANT FLUSHINGS; CONTROL DUST IN ACCORDANCE WITH PART V.D.2.c.(2); POTABLE WATER SOURCES INCLUDING WATERLINE FLUSHINGS; IRRIGATION DRAINAGE; EXTERNAL BUILDING WASHDOWN, PAVEMENT WASHWATERS AND FOUNDATION OR FOOTING DRAINS WHERE FLOWS ARE NOT CONTAMINATED WITH PROCESS MATERIAL.

4. IF THE PROJECT DISCHARGES OR HAS DISCHARGED STORMWATERTO A PERMITTED MS4, YOU MUST SEND A COPY OF THE NOI AND THE NOT OR THE ACKNOWLEDGEMENT LETTER TO THE MS4 COORDINATOR WOTHIN 7 CALENDAR DAYS FOR TRACKING.

5. IF THE CONTRACTOR DISCHARGES THROUGH THE CITY'S MUNICIPAL SEPARATE STORM SEWER SYSTEM (MS4), THE CONTRACTOR SHALL OBTAIN THE CITY REQUIRED DEWATERING PERMIT AND DESIGNATE THE CITY OF DAYTONA BEACH'S MS4 ON THE FDEP NPDES CONSTRUCTION GENERIC PERMIT NOI.

6. THE CONTRACTOR IS TO COORDINATE AN INITIAL EROSION CONTROL INSPECTION WITH THE CITY'S NPDES COORDINATOR PRIOR TO CLEARING OPERATIONS.

TREE LEGEND:

- OAK
- PINE
- PALM
- HACKBERRY
- SWEETGUM
- CHINABERRY
- CHINESE TALLOW
- AUSTRAILIAN PINE

NOTE:
Number beside tree indicates diameter at 4.5' Above Grade.

All trees may not be present.

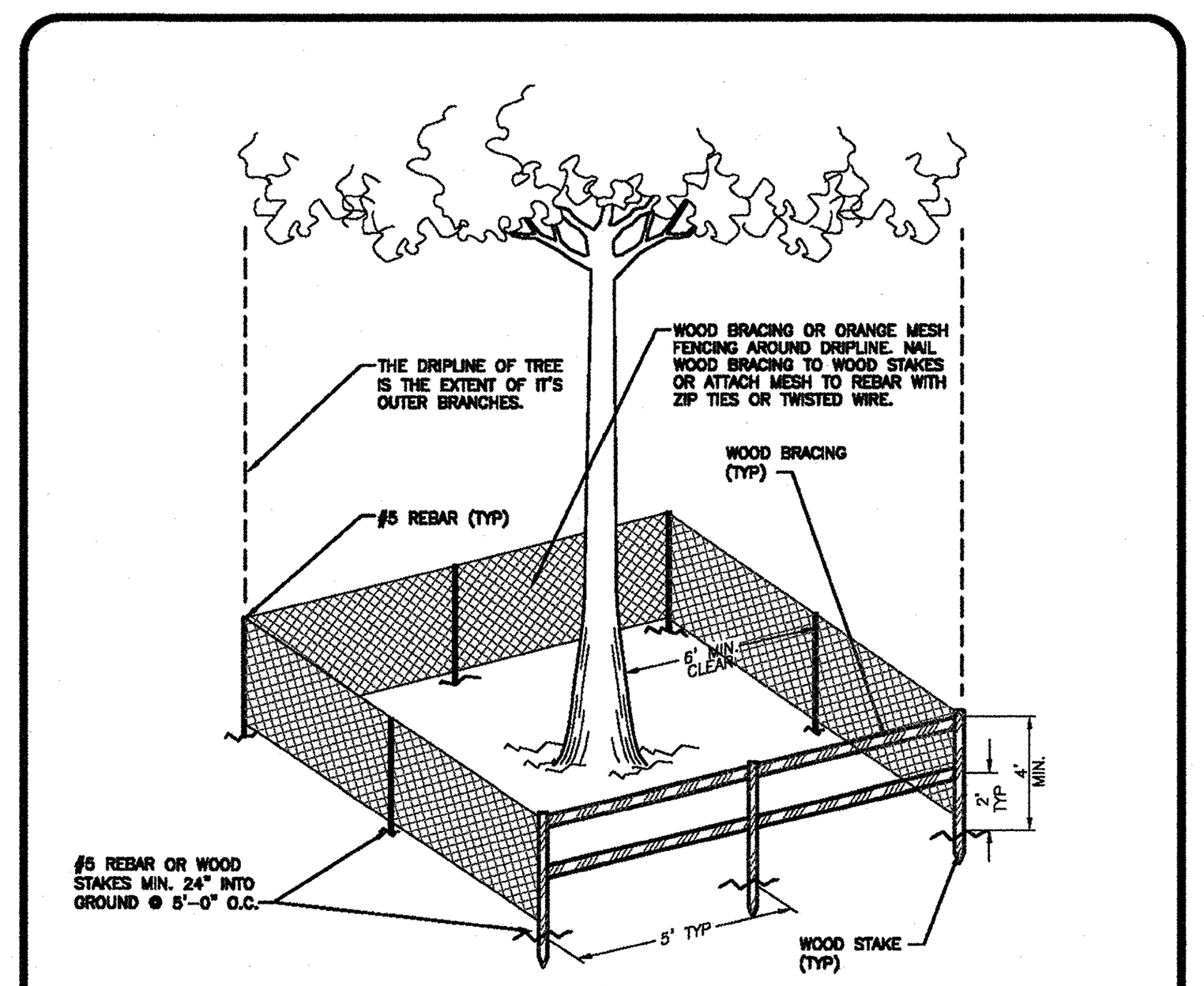

NOTES:
1. PROTECT DESIGNATED EXISTING TREES SCHEDULED TO REMAIN AGAINST:
   A. UNNECESSARY CUTTING, BREAKING, OR SKINNING OF ROOTS.
   B. SKINNING AND BRUISING OF BARK.
   C. SMOTHERING OF TREES BY STOCKPILING CONSTRUCTION OR EXCAVATION MATERIALS WITHIN DRIP-LINE.
   D. FOOT OR VEHICULAR TRAFFIC.
   E. PARKING VEHICLES WITHIN DRIP-LINE.
2. ERECT TEMPORARY WOODEN BARRICADES AS SHOWN ON THIS SHEET. BEFORE COMMENCEMENT OF ANY SITE CLEARING OR GRADING. FENCE TO BE 4' HIGH MINIMUM WITH 2"x4" POSTS AND 2ea. 2"x4" RAILS AT 2' AND 4' ABOVE GRADE AND SHALL BE SET DEEP ENOUGH IN THE GROUND TO BE STABLE WITHOUT ADDITIONAL SUPPORT. ALL FENCING SHOULD BE A MINIMUM CLEAR DISTANCE OF 6' FROM THE FACE OF ANY TREES 12" DBH AND UNDER AND SHALL FULLY ENCLOSE ALL TREES SCHEDULED TO REMAIN. NOTHING SHALL BE PLACED INSIDE OF PROTECTIVE BARRICADES, INCLUDING BUT NOT LIMITED TO CONSTRUCTION MATERIAL, MACHINERY, CHEMICALS, OR TEMPORARY SOIL DEPOSITS. ON TREES LARGER THAN 12" DBH, BARRICADES SHALL BE NO CLOSER THAN 10' FROM FACE OF TREE. WHEN PAVING, EXCAVATION, OR HARDSCAPE MUST BE DONE WITHIN BARRICADES, BARRICADES SHALL BE MOVED BACK TO A SECONDARY LOCATION AT EDGE OF WORK. EXTRA CARE MUST BE TAKEN AT THIS TIME BY THE CONTRACTOR TO INSURE THAT NO DAMAGE TO THE TREE OCCURS.
3. BARBED WIRE FENCING IS NOT PERMISSIBLE.
4. PROVIDE WATER TO TREES AS REQUIRED TO MAINTAIN THEIR HEALTH DURING CONSTRUCTION.
5. NO GRADE CHANGES ARE TO BE MADE WITHIN THE BARRICADES WITHOUT PRIOR APPROVAL OF THE OWNER OR HIS DESIGNATED REPRESENTATIVE.

THE CITY OF DAYTONA BEACH ENGINEERING DIVISION — TREE PROTECTION BARRICADE DETAIL L-6

Drawing Date:	11/2000
Drawn By:	PFT
Checked By:	
Scale:	NTS
Revision Date:	10/2011
File Name:	dL-6

EROSION & SEDIMENT CONTROL NOTES

1. CONTRACTOR IS RESPONSIBLE FOR OBTAINING AND MAKING AVAILABLE ONSITE, ALL REQUIRED FEDERAL, STATE, AND LOCAL PERMITS PRIOR TO COMMENCEMENT OF CONSTRUCTION. ANY POTENTIAL STORM WATER DISCHARGES TO THE CITY'S PERMITTED MUNICIPAL SEPARATE STORM SEWER SYSTEM (MS4) MUST BE DESIGNATED ON THE FDEP NPDES CONSTRUCTION GENERIC PERMIT AND A COPY OF THE NOTICE OF INTENT PROVIDED TO THE CITY OF DAYTONA BEACH STORM WATER COORDINATOR. THE CONTRACTOR SHALL MAINTAIN COMPLIANCE WITH ALL FEDERAL, STATE, AND LOCAL PERMITS REQUIREMENTS.
2. THE CONTRACTOR SHALL AS A MINIMUM, PREPARE AND IMPLEMENT AN EROSION AND SEDIMENT CONTROL PLAN IN ACCORDANCE WITH FLORIDA DEPARTMENT OF ENVIRONMENTAL PROTECTION (FDEP) GUIDELINES.
3. INITIAL SEDIMENT AND EROSION CONTROL MEASURES SHALL BE INSTALLED AND APPROVED BY THE CITY PRIOR TO ANY LAND DISTURBING ACTIVITIES.
4. PRIOR TO AND DURING CONSTRUCTION, THE CONTRACTOR SHALL IMPLEMENT AND MAINTAIN ALL EROSIONS AND SEDIMENT CONTROL MEASURES (BEST MANAGEMENT PRACTICES) REQUIRED TO RETAIN SEDIMENT ONSITE AND TO PREVENT VIOLATIONS OF WATER QUALITY STANDARDS. IF A PROJECT SPECIFIC EROSION AND SEDIMENT CONTROL PLAN IS APPROVED AS PART OF A PERMIT, THE PRACTICES MUST BE IN ACCORDANCE WITH THE APPROVED PLAN. IF SPECIFIC SITE CONDITIONS REQUIRE ADDITIONAL MEASURES DURING ANY PHASE OF CONSTRUCTION OR OPERATION TO PREVENT EROSION OR CONTROL OF SEDIMENT, BEYOND THOSE SPECIFIED IN THE EROSION AND SEDIMENT CONTROL PLAN, THE CONTRACTOR SHALL IMPLEMENT ADDITIONAL BEST MANAGEMENT PRACTICES AS NECESSARY.
5. CONTRACTORS SHALL MINIMIZE DISTURBANCES OF EXISTING VEGETATION AND DRAINAGE PATTERNS TO MAXIMUM EXTENT PRACTICABLE. STABILIZATION MEASURES SHALL BE INITIATED FOR EROSION AND SEDIMENT CONTROL ON DISTURBED AREAS AS SOON AS PRACTICABLE, BUT IN NO CASE MORE THAN 7 CALENDAR DAYS AFTER THE CONSTRUCTION ACTIVITY IN THAT PORTION OF THE SITE HAS TEMPORARILY OR PERMANENTLY CEASED.
6. STORM WATER RETENTION, DETENTION, STORAGE AND CONVEYANCE SYSTEMS MUST BE EXCAVATED TO ROUGH GRADE PRIOR TO BUILDING CONSTRUCTION OR PLACEMENT OF IMPERVIOUS SURFACE WITHIN THE AREA SERVED BY THOSE SYSTEMS. ADEQUATE MEASURES MUST BE TAKEN TO PREVENT SILTATION OF THESE TREATMENT SYSTEMS AND CONTROL STRUCTURES DURING CONSTRUCTION. SILTATION MUST BE REMOVED FROM THE STORM WATER SYSTEM UPON REACHING 50% CAPACITY AND IMMEDIATELY PRIOR TO FINAL GRADING AND STABILIZATION OF THE PROJECT.
7. CITY DEWATERING PERMITS SHALL BE OBTAINED AND APPROVED PRIOR TO ANY DEWATERING INTO THE CITY'S PERMITTED MS4 SYSTEM.

THE CITY OF DAYTONA BEACH ENGINEERING DIVISION — EROSION AND SEDIMENT CONTROL NOTES ST-5

FY-19/20	
Drawing Date:	01/08
Drawn By:	KLH
Checked By:	JMP
Scale:	N/A
Revision Date:	01/19
File Name:	Erosion Notes ST-5
Page 104	

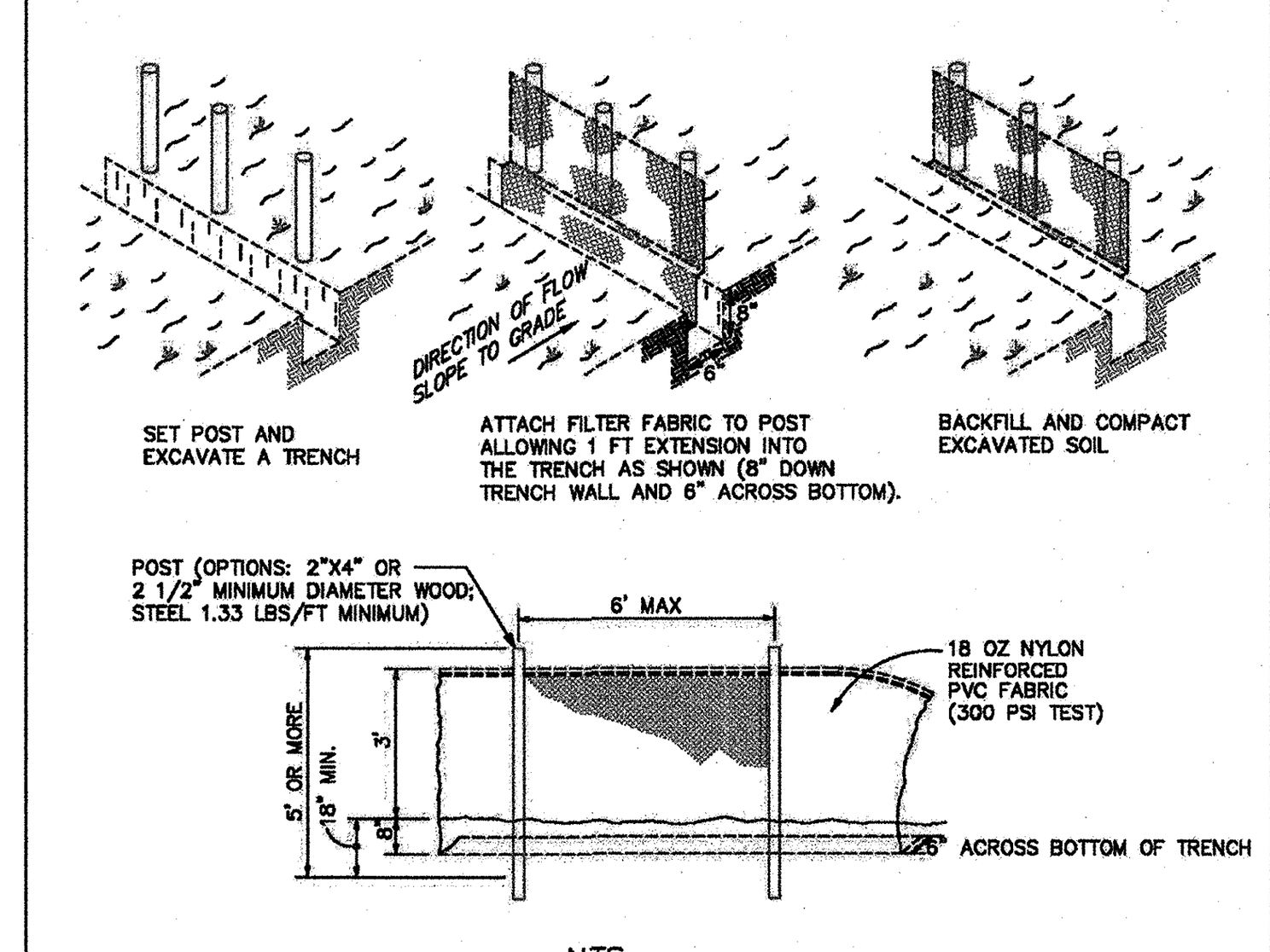

NOTES:
1. MATERIALS, CONSTRUCTION METHODS AND MAINTENANCE SHALL BE IN ACCORDANCE WITH THE FLORIDA DEPARTMENT OF TRANSPORTATION STANDARD SPECIFICATIONS AND DESIGN STANDARDS CURRENT EDITION.
2. CONTRACTOR SHALL PROVIDE SILT FENCES, TURBIDITY BARRIERS OR APPROVED BARRIERS AT ALL STORMWATER DISCHARGE POINTS FOR EROSION CONTROL AND SEDIMENT CONTROL DURING CONSTRUCTION. DEPENDING UPON FLOW VELOCITIES AND VOLUME, REDUNDANT (MULITPLE) PARALLEL FENCES MAY BE NEEDED.
3. CONTRACTOR SHALL ROUGH GRADE STORMWATER SWALES AND RETENTION AREAS IN COMPLIANCE WITH BEST MANAGEMENT PRACTICES PRIOR TO CONSTRUCTION OF SITE IMPROVEMENTS.
4. CONTRACTOR SHALL MEET ALL PERMIT CONDITIONS AS ESTABLISHED BY THE CITY OF DAYTONA BEACH AND ALL OTHER APPLICABLE AGENCIES, INCLUDING BUT NOT LIMITED TO COUNTY, FDOT, STATE, FEDERAL, AND THE SJRWMD.

THE CITY OF DAYTONA BEACH ENGINEERING DIVISION — STAKED SILT FENCE DETAIL ST-13

FY-19/20	
Drawing Date:	01/08
Drawn By:	KLH
Checked By:	JMP
Scale:	NTS
Revision Date:	01/19
File Name:	Silt Fence ST-13
Page 112	

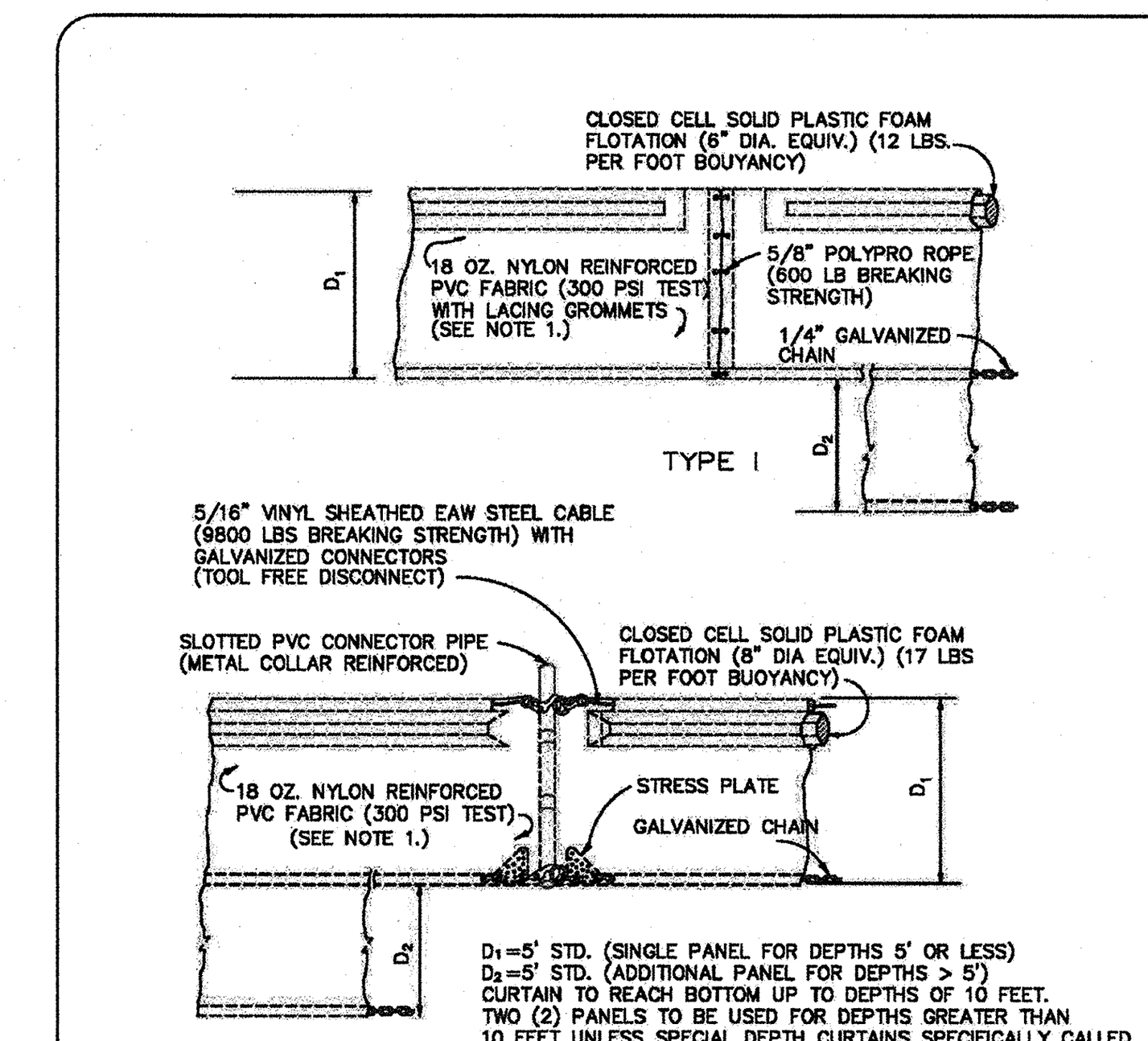

D_1=5' STD. (SINGLE PANEL FOR DEPTHS 5' OR LESS)
D_2=5' STD. (ADDITIONAL PANEL FOR DEPTHS > 5')
CURTAIN TO REACH BOTTOM UP TO DEPTHS OF 10 FEET. TWO (2) PANELS TO BE USED FOR DEPTHS GREATER THAN 10 FEET UNLESS SPECIAL DEPTH CURTAINS SPECIFICALLY CALLED FOR IN THE PLANS OR AS DETERMINED BY THE ENGINEER.

NOTE:
1. USE 18 OZ. NYLON REINFORCED PVC FABRIC FOR STANDING WATER. USE FILTER FABRIC FOR FLOWING WATER.

NOTICE:
COMPONENTS OF TYPES I AND II MAY BE SIMILAR OR IDENTICAL TO PROPRIETARY DESIGNS. ANY INFRINGEMENT ON THE PROPRIETARY RIGHTS OF THE DESIGNER SHALL BE THE SOLE RESPONSIBILITY OF THE USER. SUBSTITUTIONS FOR TYPES I AND II SHALL BE AS APPROVED BY THE CITY.

THE CITY OF DAYTONA BEACH ENGINEERING DIVISION — FLOATING TURBIDITY BARRIER DETAIL ST-14

FY-19/20	
Drawing Date:	01/08
Drawn By:	KLH
Checked By:	JMP
Scale:	NTS
Revision Date:	01/19
File Name:	Floating Turbidity Barrier ST-14
Page 113	

NO.	DATE	APPR.	REVISION
3	10/23/19	JHH	REVISED PER COUNTY COMMENTS DATED 10/21/19
2	10/15/19	JHH	REVISED PER CODB COMMENTS DATED 9/25/19
1	9/23/19	JHH	REVISED PER COUNTY COMMENTS DATED 8/20/19

THE PERFORMANCE GROUP
CIVIL ENGINEERING / PLANNING / DEVELOPMENT
JOSEPH H. HOPKINS, P.E. NO. 48059
LICENSED BUSINESS CERTIFICATION NO. 7175
100 MARINA POINT DR. DAYTONA BEACH, FL 32114
PHONE: (386)239-7166 FAX: (386)239-7120

DEMOLITION PLAN

DME SPORTS, LLC

NOT RELEASED FOR CONSTRUCTION

JOSEPH HUGH HOPKINS LICENSE NO. 48059 STATE OF FLORIDA PROFESSIONAL ENGINEER

THIS ITEM HAS BEEN DIGITALLY SIGNED AND SEALED BY JOSEPH H. HOPKINS, P.E. ON THE DATE ADJACENT TO THE SEAL. PRINTED COPIES OF THIS DOCUMENT ARE NOT CONSIDERED SIGNED AND SEALED AND THE SIGNATURE MUST BE VERIFIED ON ANY ELECTRONIC COPIES.

Digitally signed by Joseph H Hopkins
DN: C=US, O=Unaffiliated, OU=A01410C0000016D83FDFA8F0000437F, CN=Joseph H Hopkins
Reason: I am the author of this document
Location: 100 Marina Point Dr. Daytona Beach, FL 32114
Date: 2020-01-08 10:57:30
Foxit PhantomPDF Version: 9.6.0
BUS. CERT. LIC. 7175

SCALE:	1"=30'
DESIGNED:	JHH
DRAWN:	KMP
DATE:	1/8/19
PROJECT NO.	250
250-REV SITE PLAN 2019 2B	
SHEET	C3 OF 10

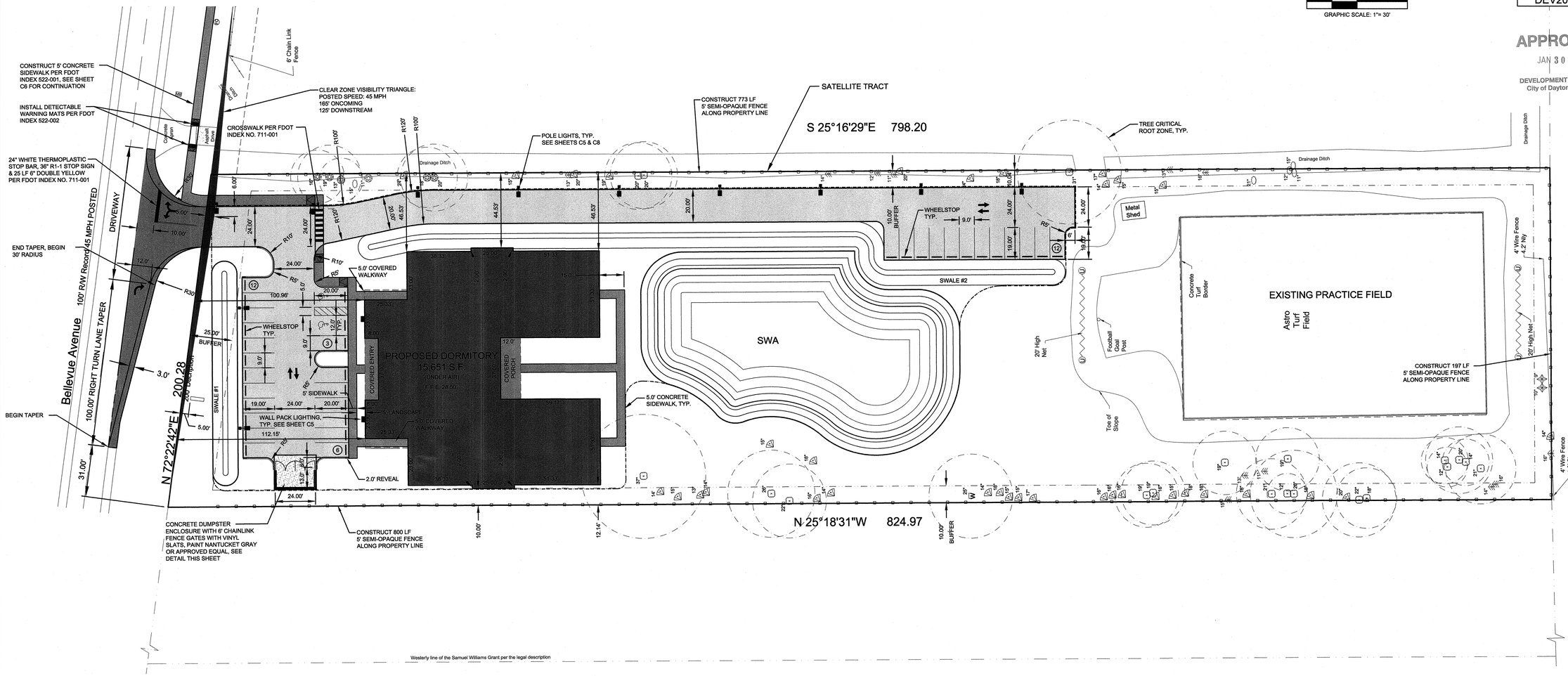

GRAPHIC SCALE: 1"= 30'

DEVELOPMENT REVIEW
City of Daytona Beach
APPROVAL OF: SP
DATE: _____ FILE: _____

DEV2019-128

APPROVED
JAN 30 2020
DEVELOPMENT SERVICES
City of Daytona Beach

NO.	DATE	APPR.	REVISION
3	10/23/19	JHH	REVISED PER COUNTY COMMENTS DATED 10/21/19
2	10/15/19	JHH	REVISED PER COBB COMMENTS DATED 9/25/19
1	9/23/19	JHH	REVISED PER COUNTY COMMENTS DATED 8/20/19

THE PERFORMANCE GROUP
CIVIL ENGINEERING / PLANNING / DEVELOPMENT
JOSEPH H. HOPKINS, P.E. NO. 48059
LICENSED BUSINESS CERTIFICATION NO. 7175
100 MARINA POINT DRIVE, DAYTONA BEACH, FL 32114
PHONE: (386)239-1184 FAX: (386)239-1213

SATELLITE TRACT DIMENSION PLAN

DME SPORTS, LLC

NOT RELEASED FOR CONSTRUCTION

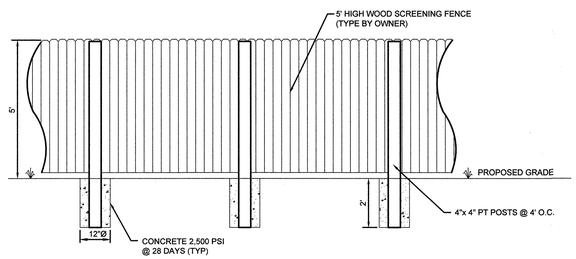

WOOD SCREENING FENCE DETAIL
NOT TO SCALE

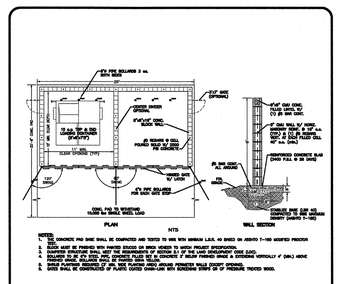

THE CITY OF DAYTONA BEACH
ENGINEERING DIVISION

CMU DUMPSTER ENCLOSURE (MULTIPLE UNIT) DETAIL
C-11

Drawing Date: 05/2007
Scale: NTS
Designed: TM
Drawn: TM
Review Date: 10/2013
File Name: det-11

JOSEPH HUGH HOPKINS LICENSE NO. 48059 STATE OF FLORIDA PROFESSIONAL ENGINEER

THIS ITEM HAS BEEN DIGITALLY SIGNED AND SEALED BY JOSEPH H. HOPKINS, P.E. ON THE DATE ADJACENT TO THE SEAL. PRINTED COPIES OF THIS DOCUMENT ARE NOT CONSIDERED SIGNED AND SEALED AND THE SIGNATURE MUST BE VERIFIED ON ANY ELECTRONIC COPIES.

Digitally signed by Joseph H Hopkins
DN: C=US, O=Unaffiliated, OU=A01410C0000016D83FDFA8F0003437F, CN=Joseph H Hopkins
Reason: I am the author of this document
Location: 100 Marina Point Dr. Daytona Beach, FL 32114
Date: 2020-01-08 10:58:06
Foxit PhantomPDF Version: 9.6.0 BUS. CERT. LIC. 7175

SCALE:	1"=30'
DESIGNED:	JHH
DRAWN:	KMP
DATE:	1/8/19
PROJECT NO.	
250	
250-REV SITE PLAN 2019 2B	

SHEET C4 OF 10

FIRE SYSTEM NOTES:

1. FDC PIPING SHALL BE DR-14, 200 PSI RATED OR EQUIVALENT.
2. PRIVATE FIRE HYDRANT BODY SHALL BE PAINTED RED. BONNETS SHALL BE PAINTED BASED UPON THE ACTUAL FLOW NUMBERS.
3. PROVIDE KNOX LOCKABLE PLUGS FOR THE FDC.
4. MAINTAIN 7.6 FEET CLEARANCE TO THE FRONT AND SIDES OF ALL HYDRANTS.
5. MOUNT KNOX BOX BETWEEN 5' AND 6' HIGH ON THE BUILDING EXTERIOR AT THE MAIN ENTRANCE
6. A LICENSED FIRE SPRINKLER CONTRACTOR SHALL CONDUCT A FIRE FLOW TEXT ON THE NEWLY INSTALLED HYDRANT, MAKING COPIES AVAILABLE TO CITY PERSONNEL, PRIOR TO THE ISSUANCE OF CO.
7. TWO-WAY RADIO COMMUNICATION ENHANCEMENT SYSTEM MAY BE REQUIRED AT THE TIME OF BUILDING CONSTRUCTION OR AT A LATER DATE, IF THE FIRE DEPARTMENT RADIO COMMUNICATION IS DEEMED TO BE INADEQUATE.
8. PVC FIRE MAIN SHALL BE AWWA C900, CLASS 150 DR 18. SEE NOTE 9 OF THE UTILITY NOTES ON THE COVER SHEET.
9. BUILDING CONSTRUCTION TYPE: "R". SIGN TO BE MOUNTED ON THE BUILDING'S EXTERIOR 5' TO 6' ABOVE FINISHED FLOOR AT THE MAIN ENTRANCE.
10. THE BUILDING WILL BE IN COMPLIANCE WITH NFPA 1:11.10.1 (6TH EDITION FL FIRE PREVENTION CODE) IN REGARD TO F.D. TWO-WAY RADIO COMMUNICATION ENHANCEMENT SYSTEMS. THE POSSIBLE NEED FOR SUCH A SYSTEM WILL BE DETERMINED BY THE FIRE MARSHAL OR APPROPRIATE CITY OFFICIAL BASED UPON TESTING PERFORMED BY AN AUTHORIZED COMMUNICATION CONTRACTOR UTILIZING RADIO STRENGTH GRID TESTING OF THE PROPERTY IN ACCORDANCE WITH NFPA 71 (2013) AND NFPA 1221 (2016).
11. THE REQUIRED GRID TESTING TO DETERMINE IS AN ENHANCEMENT SYSTEM IS REQUIRED, IS TO BE COMPLETED PRIOR TO BUILDING C.O. SHOULD A TWO-WAY RADIO COMMUNICATION ENHANCEMENT SYSTEM BE DETERMINED TO BE REQUIRED, IT MUST BE INSTALLED PRIOR TO BUILDING C.O.

SITE LIGHTING FIXTURE SCHEDULE

MARK	DESCRIPTION
P1	LITHONIA LIGHTING CATALOG #: TWH LED 30C 1000 40K T3M MVOLT DDBXD, WALL MOUNTED AT 10' HIGH. DRIVE CURRENT @ 1000mA; SYSTEM WATTS 78W; 30 LEDS = 8,375.5 LUMENS
P2	LITHONIA LIGHTING CATALOG #: DSXWPM LED 20C 1000 AMBPC T3S MVOLT HS, MOUNTED ON A 15' POLE. DRIVE CURRENT 1000mA; SYSTEM WATTS 74W; 20 LEDS = 4,480 LUMENS

POLE FOUNDATIONS TO BE IN ACCORDANCE WITH MFR. SPECIFICATIONS.

SHEET NOTES:

1. COORDINATE RELOCATION OF FIBER OPTIC RISER TO A LOCATION 3' MINIMUM OUTSIDE PROPOSED PAVED DRIVEWAY.
2. THE CLEAR ZONE IS A MINIMUM OF 18' FROM THE OUTSIDE EDGE OF THE TRAVEL LANE. ALL ACTIVITIES SHALL TAKE PLACE OUTSIDE THE CLEAR ZONE.
3. SEE VOLUSIA COUNTY NOTE NUMBER 5 FOR OFFSITE PAVEMENT SPECIFICATIONS, SHEET C10.

WALL MOUNTED LIGHT FIXTURE (P1)

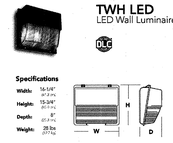

POLE MOUNTED LIGHT FIXTURE (P2)

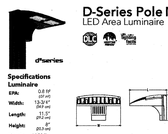

0 15 30 60
GRAPHIC SCALE: 1"= 30'

DEVELOPMENT REVIEW
City of Daytona Beach
APPROVAL OF: CP
DATE: _____ FILE: _____
DEV2019-128

APPROVED
JAN 30 2020
DEVELOPMENT SERVICES
City of Daytona Beach

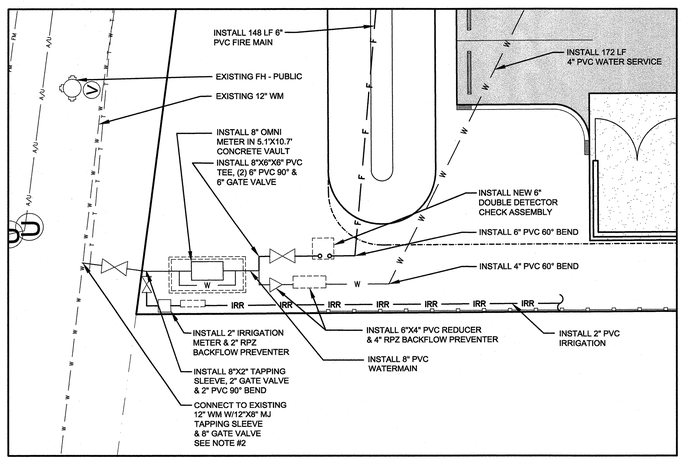

ENLARGED WATER PLAN
SCALE: 1"= 10'

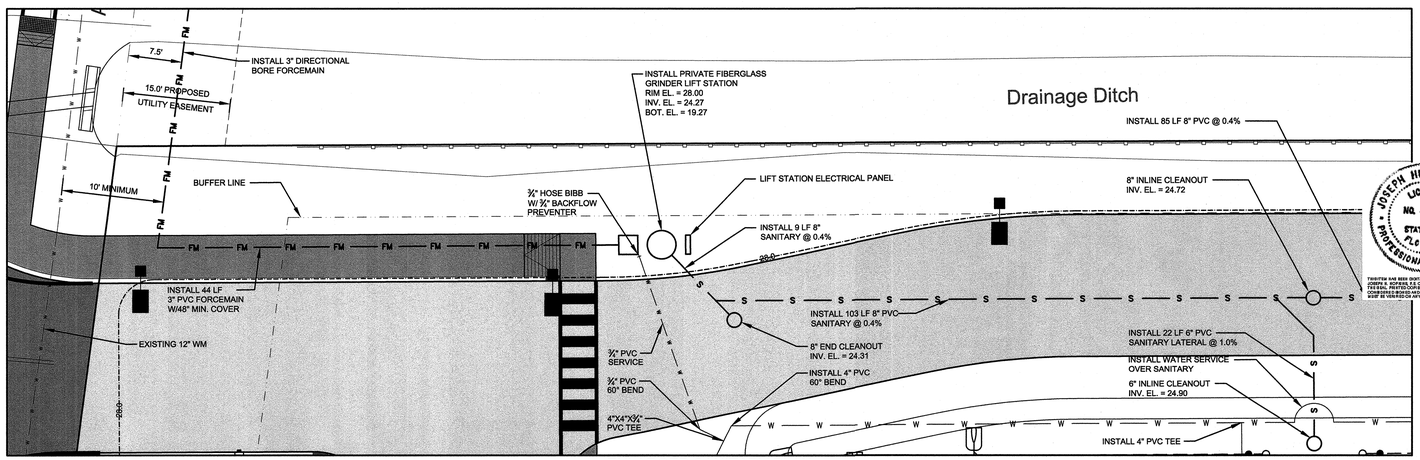

ENLARGED SANITARY PLAN
SCALE: 1"= 10'

NO.	DATE	APPR.	REVISION
3	10/23/19	JHH	REVISED PER COUNTY COMMENTS DATED 10/21/19
2	10/15/19	JHH	REVISED PER CODB COMMENTS DATED 9/25/19
1	9/23/19	JHH	REVISED PER COUNTY COMMENTS DATED 8/20/19

THE PERFORMANCE GROUP
CIVIL ENGINEERING / PLANNING / DEVELOPMENT
JOSEPH H. HOPKINS, P.E. NO. 48059
LICENSED BUSINESS CERTIFICATION NO. 7175
100 MARINA POINT DRIVE, DAYTONA BEACH, FL 32114
PHONE: (386)239-1164 FAX: (386)239-7120

SATELLITE TRACT PAVING, DRAINAGE & UTILITY PLAN

DME SPORTS, LLC

NOT RELEASED FOR CONSTRUCTION

Digitally signed by Joseph H Hopkins
DN: C=US, O=Unaffiliated, OU=A01410C000001 6D83FDFA8F0900437F, CN=Joseph H Hopkins
Reason: I am the author of this document
Location: 100 Marina Point Dr. Daytona Beach, FL 32114
Date: 2020-01-08 10:58:45
Foxit PhantomPDF Version: 9.6.0

JOSEPH HUGH HOPKINS LICENSE NO. 48059 STATE OF FLORIDA PROFESSIONAL ENGINEER

THIS ITEM HAS BEEN DIGITALLY SIGNED AND SEALED BY JOSEPH H. HOPKINS, P.E. ON THE DATE ADJACENT TO THE SEAL. PRINTED COPIES OF THIS DOCUMENT ARE NOT CONSIDERED SIGNED AND SEALED AND THE SIGNATURE MUST BE VERIFIED ON ANY ELECTRONIC COPIES

SCALE:	AS NOTED
DESIGNED:	JHH
DRAWN:	KMP
DATE:	1/8/19
PROJECT NO.	250
250-REV SITE PLAN 2019 2B	
SHEET	C5 OF 10

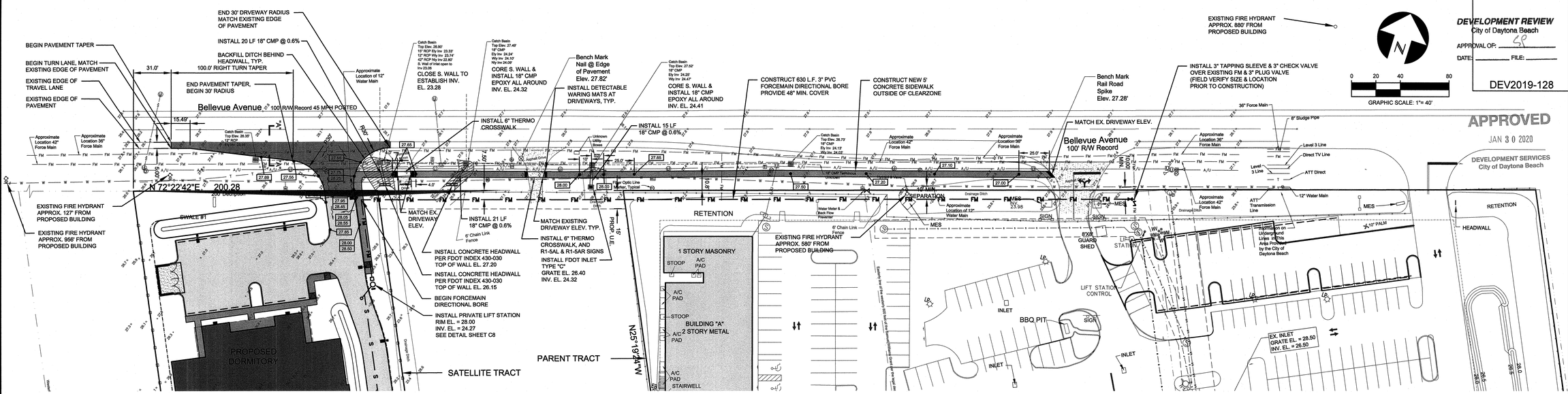

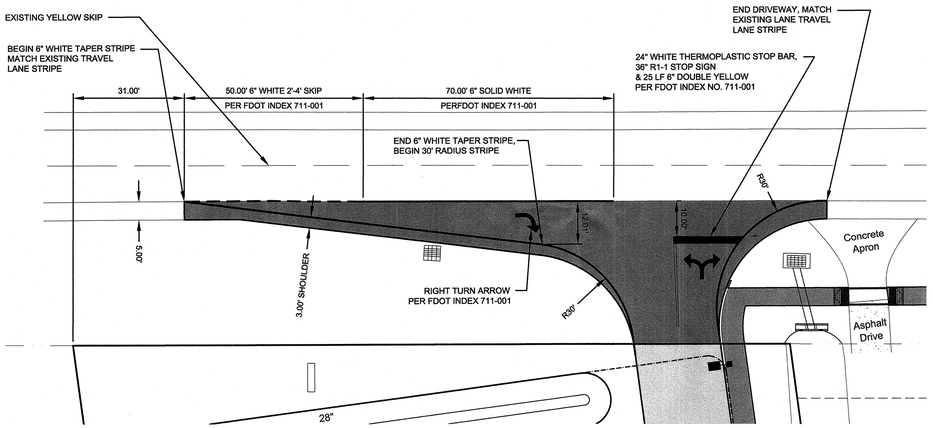

OFFSITE STRIPING PLAN

SCALE: 1"= 20'

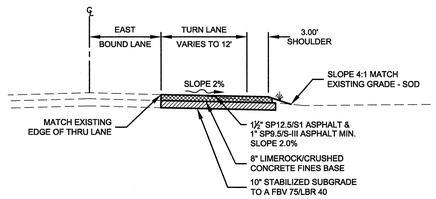

BELLEVUE AVE. TURN LANE SECTION A-A

SCALE: 1"= 10'

UTILITY TEST NOTES:

WATER TEST: HYDROSTATIC AND LEAK TEST: POTABLE WATER MAINS SHALL BE FILLED AND HYDROSTATICALLY TESTED TO A PRESSURE OF 150 PSI. THE PRESSURE SHALL BE MAINTAINED FOR A 2 HOUR PERIOD. THE LEAKAGE RATE SHALL BE COMPUTED DURING THE TEST PERIOD AND SHALL NOT EXCEED 5 GAL/HR PER MILE OF PIPE AT THE GIVEN TEST PRESSURE. IN THE EVENT THE TEST FAILS, REPAIRS SHALL BE MADE AND THE SYSTEM SHALL BE RETESTED.

FORCEMAIN TEST: HYDROSTATIC AND LEAK TEST: SANITARY SEWER MAINS SHALL BE FILLED AND HYDROSTATICALLY TESTED TO A PRESSURE OF 100 PSI. THE PRESSURE SHALL BE MAINTAINED FOR A 2 HOUR PERIOD. THE LEAKAGE RATE SHALL BE COMPUTED DURING THE TEST PERIOD AND SHALL NOT EXCEED 1.5 GAL/HR PER MILE OF PIPE AT THE GIVEN TEST PRESSURE. IN THE EVENT THE TEST FAILS, REPAIRS SHALL BE MADE AND THE SYSTEM SHALL BE RETESTED.

GRAVITY SEWER TEST: GRAVITY SEWERS SHALL BE INSTALLED WITH MINIMAL HORIZONTAL DEVIATION. HORIZONTAL DEVIATION SHALL NOT EXCEED 4 INCHES PER LENGTH OF PIPE. DEFLECTION SHALL BE LIMITED TO A MAXIMUM OF 5%. USE RIGID BALL OR MANDREL FOR DEFLECTION TEST WITH A DIAMETER OF NOT LESS THAN 95% OF THE TEST PIPE DIAMETER. BEDDING SHALL CONFORM TO ASTM CLASS III CRITERIA WITH SOIL COMPACTION AT A MINIMUM OF 95% IN ACCORDANCE WITH AASHO T-99 TEST METHOD. THE GRAVITY SEWER MAINS SHALL BE TESTED FOR BOTH INFILTRATION AND EXFILTRATION. THE LEAKAGE RATE FOR EITHER TEST TEST SHALL NOT EXCEED 50 GAL/INCH OF PIPE DIAMETER PER MILE OF PIPE PER DAY.

FORCEMAIN NOTES:

1. FORCEMAINS LESS THAN 18" MAY USE OVC C-900 OR C905 DR-18. FORCEMAINS 18" AND LARGER SHALL BE DUCTILE IRON PIPE (dip), CLASS 350, EPOXY LINED. ALL NON DUCTILE IRON PIPE HORIZONTAL DIRECTIONAL DRILL FORCEMAINS SHALL HAVE A MINIMUM WORKING PRESSURE OF 160 PSI. THE CITY MAY REQUIRE A HIGHER PRESSURE RATING DEPENDING ON SITE CONDITIONS. INSIDE DIAMETER OF NON DIP HORIZONTAL DIRECTIONAL DRILL PIPE SHALL MATCH THE INSIDE DIAMETER OF CONNECTION PIPES. DIRECTIONAL DRILLS SHALL HAVE FUSED MJ ADAPTERS.
2. FORCEMAIN MINIMUM DEPTH OF COVER SHALL BE 48". ALL FORCEMAINS SHALL BE DISTINCTLY MARKED BY GREEN STRIPES OR GREEN COLOR.
3. ALL FITTINGS, VALVES, ETC. SHALL BE DUCTILE IRON (MJ OR FLANGED) AND RESTRAINED. ALL FORCEMAINS SHALL USE THRUST RESTRAINT AS CALCULATED BY A PROGRAM AVAILABLE AT (EBAA.COM)
4. ALL IN-LINE SANITARY SEWER FORCEMAIN VALVES SHALL BE PLUG VALVES UNLESS OTHERWISE NOTED. VALVES SHALL BE INSTALLED AT EACH END OF THE FORCEMAIN AND ON STUB OUTS.
5. ALL C-900 PVC PIPE REQUIREMENTS REFERENCE THE C-900 STANDARDS. DR UPDATES FOR BURST PROTECTION MAY BE REQUIRED WHEN USING C-900 STANDARDS.
6. INFORMATION ON UNDERGROUND LINES IN THIS AREA PROVIDED BY THE CITY OF DAYTONA BEACH. THE CITY OF DAYTONA BEACH DOES NOT WARRANTY THE ACCURACY, COMPLETENESS, RELIABILITY AND/OR SUITABILITY OF THE INFORMATION. FIELD VERIFICATION IS REQUIRED.

NO.	DATE	APPR.	REVISION
3	10/23/19	JHH	REVISED PER COUNTY COMMENTS DATED 10/21/19
2	10/15/19	JHH	REVISED PER COB COMMENTS DATED 9/25/19
1	9/23/19	JHH	REVISED PER COUNTY COMMENTS DATED 8/20/19

THE PERFORMANCE GROUP
CIVIL ENGINEERING / PLANNING / DEVELOPMENT
JOSEPH H. HOPKINS, P.E. NO. 48059
LICENSED BUSINESS CERTIFICATION NO. 7175
100 MARINA POINT DR. DAYTONA BEACH, FL 32114
PHONE (386)239-1166 FAX: (386)239-7126

OFFSITE PAVING, DRAINAGE & UTILITY PLAN

DME SPORTS, LLC

NOT RELEASED FOR CONSTRUCTION

JOSEPH HUGH HOPKINS LICENSE NO. 48059 STATE OF FLORIDA PROFESSIONAL ENGINEER

THIS ITEM HAS BEEN DIGITALLY SIGNED AND SEALED BY JOSEPH H. HOPKINS, P.E. ON THE DATE ADJACENT TO THE SEAL. PRINTED COPIES OF THIS DOCUMENT ARE NOT CONSIDERED SIGNED AND SEALED AND THE SIGNATURE MUST BE VERIFIED ON ANY ELECTRONIC COPIES.

Digitally signed by Joseph H Hopkins
DN: C=US, O=Unaffiliated, OID.0.9.2342.19200300.100.1.1=C00000016D63FDFA8F0001437F, CN=Joseph H Hopkins
Reason: I am the author of this document
Location: 100 Marina Point Dr. Daytona Beach, FL 32114
Date: 2020-01-08 14:55:17
Foxit PhantomPDF Version: 9.6.0

SCALE:	1"=40'
DESIGNED:	JHH
DRAWN:	KMP
DATE:	1/8/19
PROJECT NO.	
250	
250-REV SITE PLAN 2019 2B	
SHEET C6 OF 10	

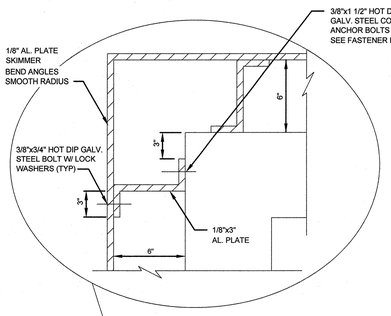

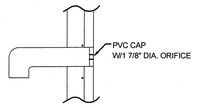

CAP DETAIL

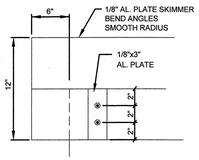

FASTENER DETAIL

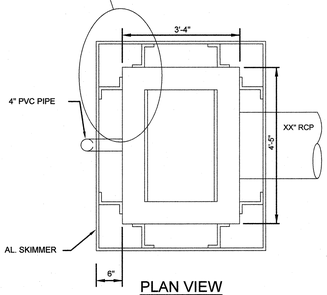

PLAN VIEW

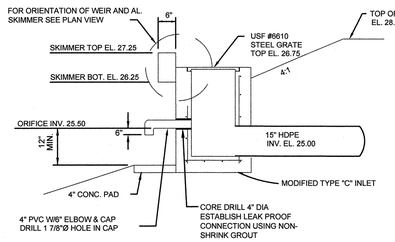

SECTION

CONTROL STRUCTURE DETAIL
NOT TO SCALE

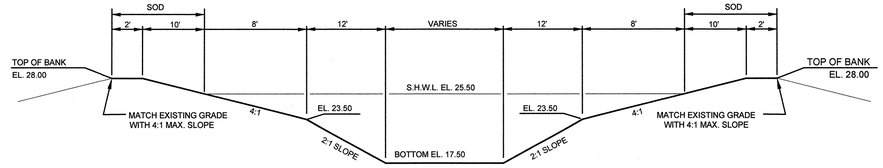

TYPICAL POND SECTION
NOT TO SCALE

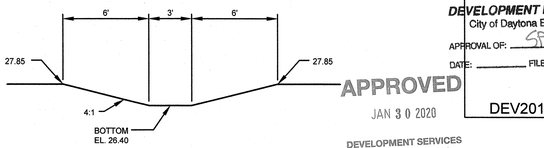

TYPICAL SWALE SECTION
NOT TO SCALE

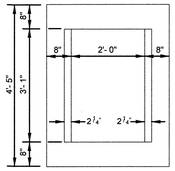

PLAN

RECOMMENDED MAXIMUM PIPE SIZE:
2'-0" WALL - 18" PIPE
3'-1" WALL - 24" PIPE

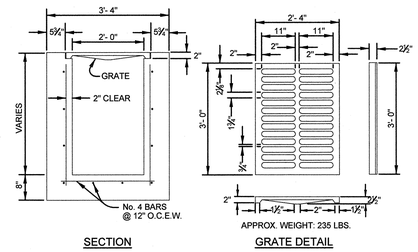

SECTION GRATE DETAIL

TYPE "C" INLET DETAIL

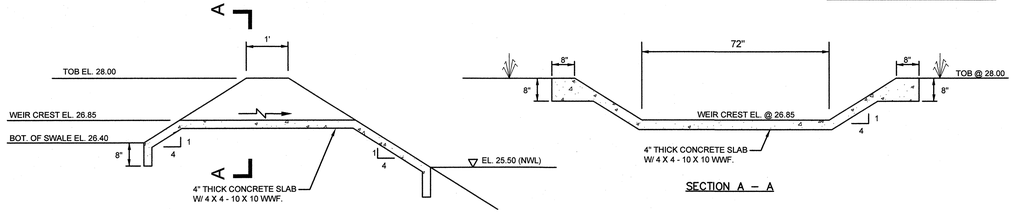

SECTION A – A

CONCRETE SPILLWAY DETAIL
NTS

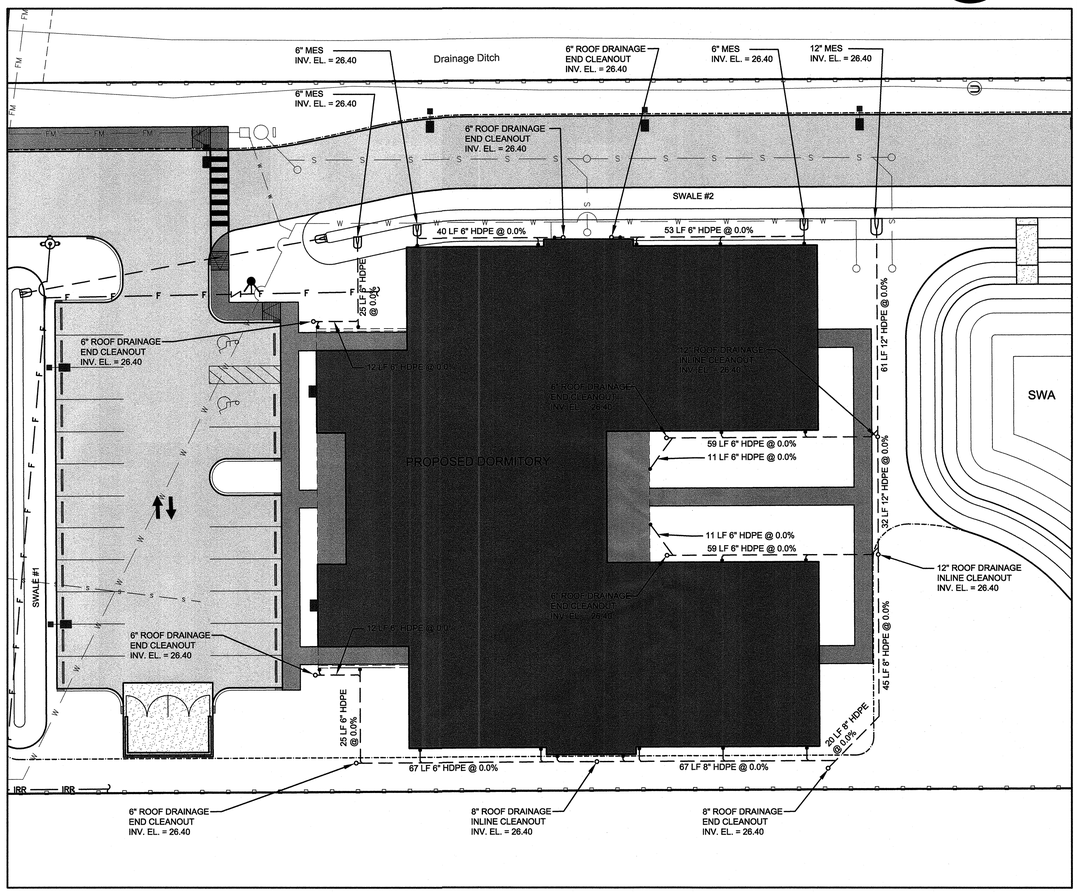

ENLARGED ROOF DRAINAGE PLAN
SCALE: 1"= 20'

D	X	A	B	C	E	F	G	M	N
12"	2'-4"	2.18'	3.06'	5.24'	3.03'	7"	1.03'	4.34'	1.17'
15"	2'-7"	2.27'	4.09'	6.36'	4.03'	8"	1.22'	4.63'	1.19'
18"	2'-10"	2.36'	5.12'	7.48'	5.03'	9"	1.41'	4.92'	1.21'
24"	3'-5"	2.53'	7.18'	9.71'	7.03'	11"	1.73'	5.50'	1.25'
30"	4'-3"	2.70'	9.25'	11.95'	9.03'	13"	2.00'	6.08'	1.29'
36"	5'-1"	2.87"	11.31'	14.18'	11.03'	15'	2.24'	6.67'	1.33'
42"	6'-0"	3.05'	13.37'	16.42'	13.03'	17"	2.45'	7.25'	1.38'

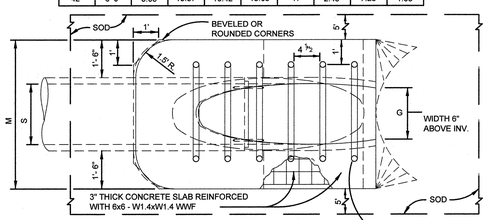

PLAN

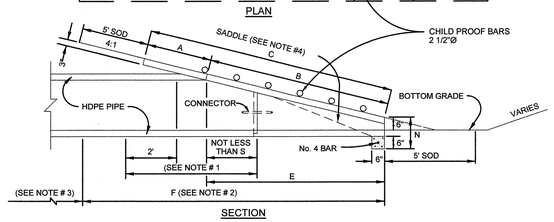

SECTION

NOTES:
1. NO PIPE JOINT PERMITTED UNLESS APPROVED BY THE ENGINEER.
2. PIPE TO BE INCLUDED UNDER UNIT PRICE FOR MITERED END SECTION.
3. PAID FOR AS CROSS DRAIN PIPE CULVERT.
4. SEE FDOT INDEX NUMBER 430-021.

MITERED END SECTION CROSS DRAIN DETAIL

D	A	B	C	E	F	G	M	N
15"	2.27'	4.09'	6.36'	4.03'	8'	1.22'	4.63'	1.19'
18"	2.36'	5.12'	7.48'	5.03'	9'	1.41'	4.92'	1.21'
24"	2.53'	7.18'	9.71'	7.03'	11'	1.73'	5.50'	1.25'
30"	2.70'	9.25'	11.95'	9.03'	13'	2.00'	6.08'	1.29'
36"	2.87'	11.31'	14.18'	11.03'	15'	2.24'	6.67'	1.33'
42"	3.05'	13.37'	16.42'	13.03'	17'	2.45'	7.25'	1.38'

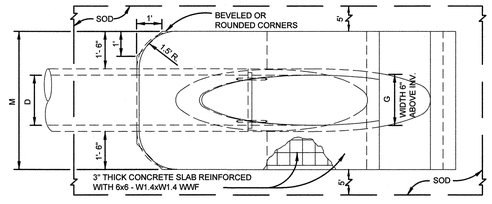

PLAN

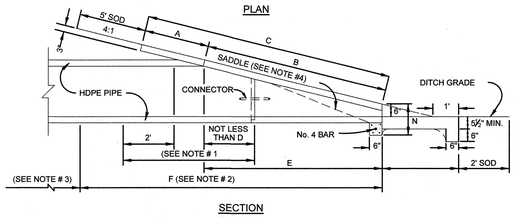

SECTION

NOTES:
1. NO PIPE JOINT PERMITTED UNLESS APPROVED BY THE ENGINEER.
2. PIPE TO BE INCLUDED UNDER UNIT PRICE FOR MITERED END SECTION.
3. PAID FOR AS CROSS DRAIN PIPE CULVERT. SEE FDOT INDEX NO. 430-022.
4. SLOPE 4:1 MITER TO C PIPE FOR PIPES 18" AND SMALLER, 2:1 FOR PIPES 24" AND LARGER.

MITERED END SECTION SIDE DRAIN DETAIL

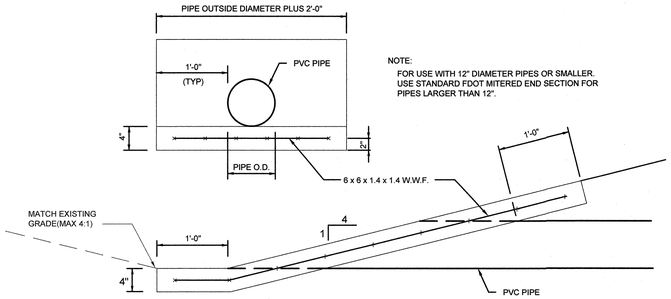

MITERED END DETAIL

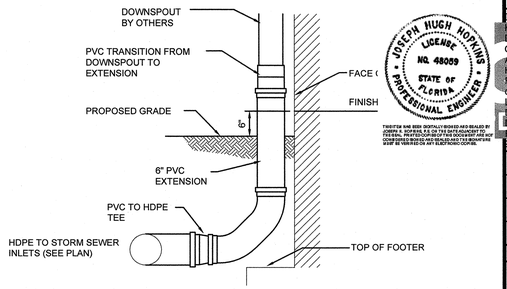

NOTE: ALL CONNECTIONS TO BE WATER TIGHT

DOWNSPOUT CONNECTION

DEVELOPMENT REVIEW
City of Daytona Beach
APPROVAL OF:
DATE: FILE:
APPROVED
JAN 30 2020
DEV2019-128

DEVELOPMENT SERVICES
City of Daytona Beach

0 10 20 40
GRAPHIC SCALE: 1"= 20'

NO.	DATE	APPR.	REVISION
3	10/23/19	JHH	REVISED PER COUNTY COMMENTS DATED 10/21/19
2	10/15/19	JHH	REVISED PER CODB COMMENTS DATED 9/25/19
1	9/23/19	JHH	REVISED PER COUNTY COMMENTS DATED 8/20/19

THE PERFORMANCE GROUP
CIVIL ENGINEERING / PLANNING / DEVELOPMENT

JOSEPH H. HOPKINS, P.E. NO. 48069
LICENSED BUSINESS CERTIFICATION NO. 7175
100 MARINA POINT DRIVE, DAYTONA BEACH, FL 32114
PHONE (386)239-1166 FAX (386)239-7126

STORMWATER DETAILS & SECTIONS

DME SPORTS, LLC

NOT RELEASED FOR CONSTRUCTION

Digitally signed by Joseph H Hopkins
DN: c=US, o=Unaffiliated, ou=401310C0000016D83FDFA8F0000437F, cn=Joseph H Hopkins
Reason: I am the author of this document
Location: 100 Marina Point Dr. Daytona Beach, FL 32114
Date: 2020-01-08 10:59:52
Foxit PhantomPDF Version: 9.6.0

BUS. CERT. LIC. 7175

SCALE:	AS NOTED
DESIGNED:	JHH
DRAWN:	KMP
DATE:	1/8/19
PROJECT NO.	
250	
250-REV SITE PLAN 2019 2B	

SHEET C7 OF 10

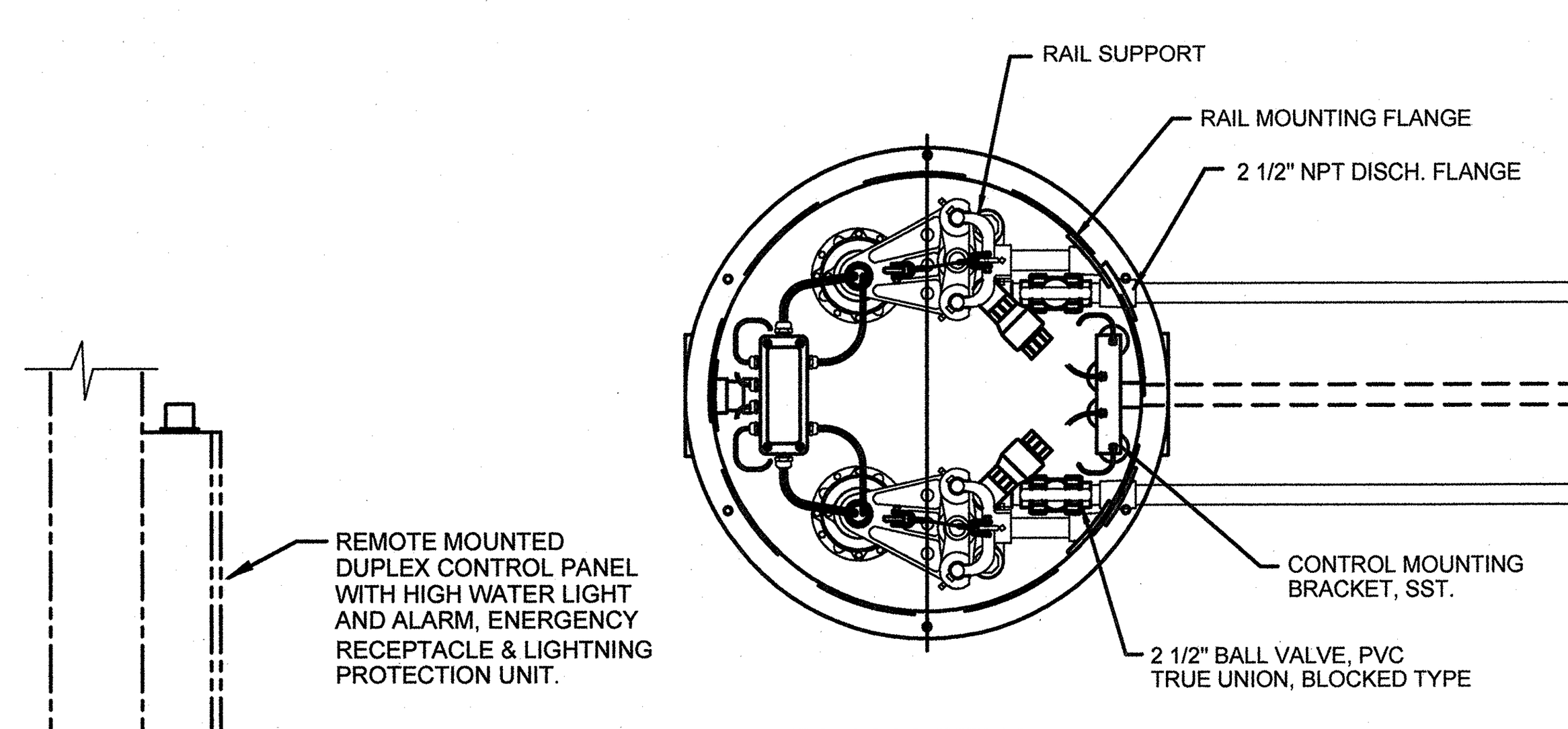

PLAN VIEW

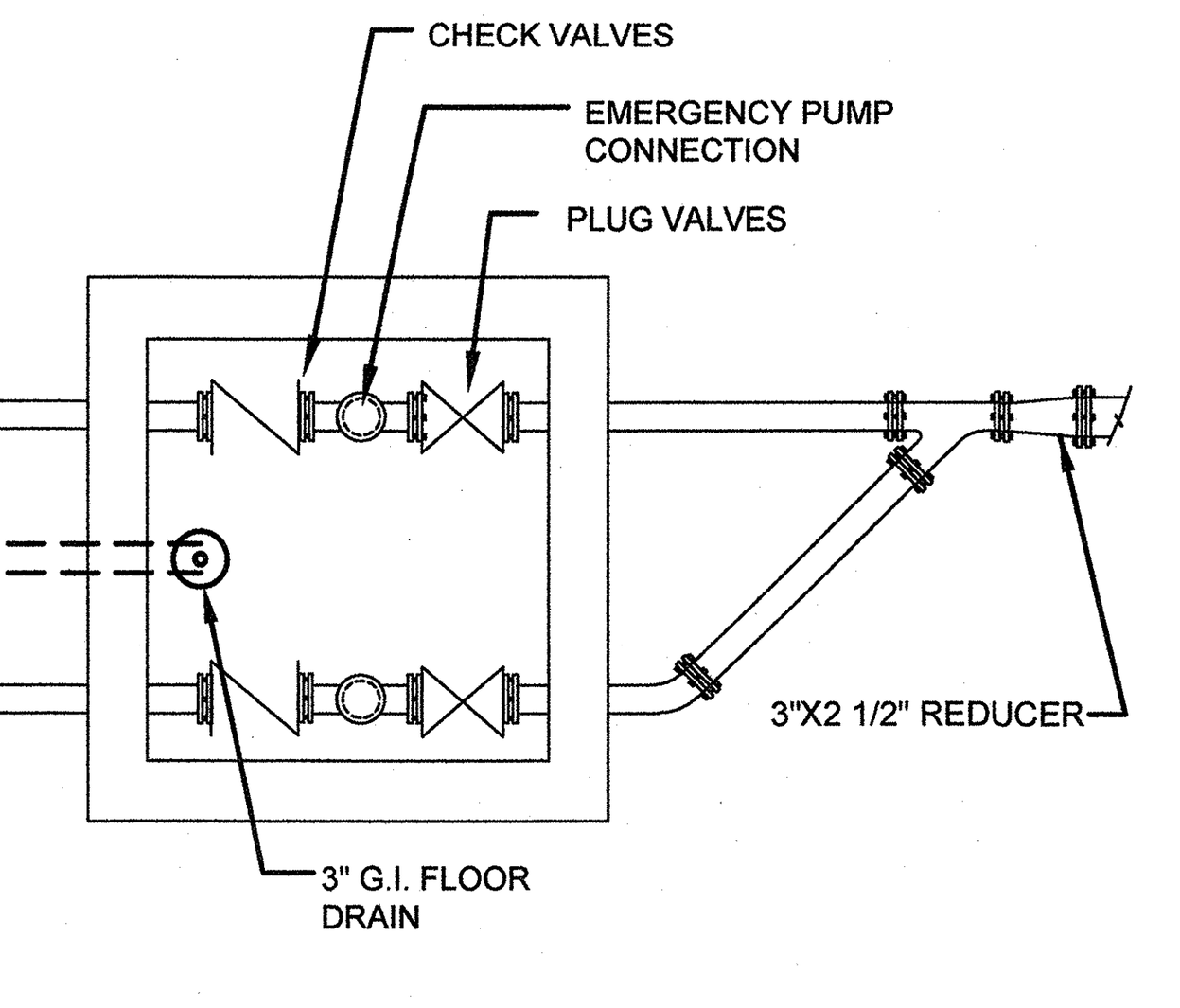

VALVE BOX

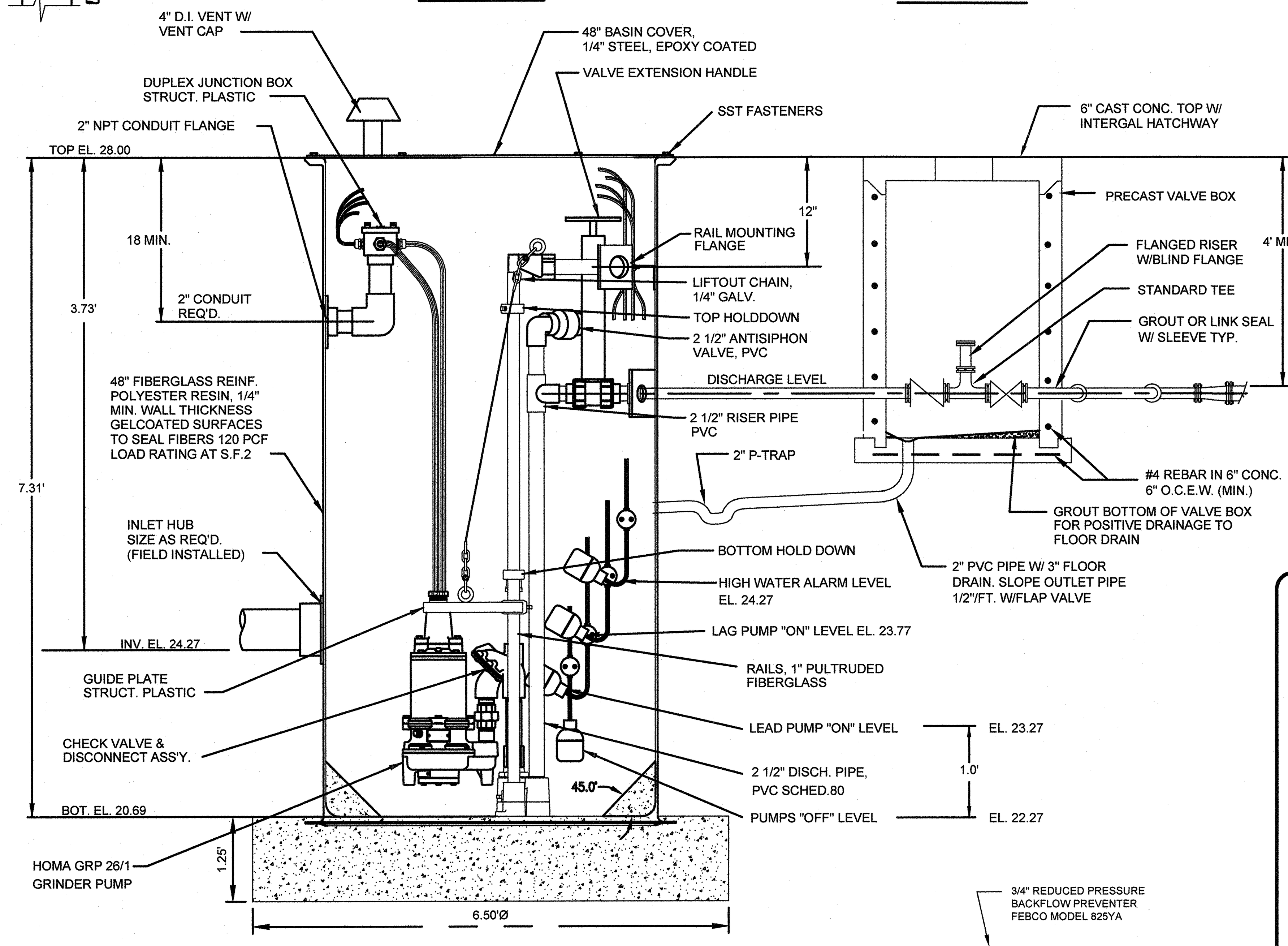

PRIVATE FIBERGLASS GRINDER PUMP STATION

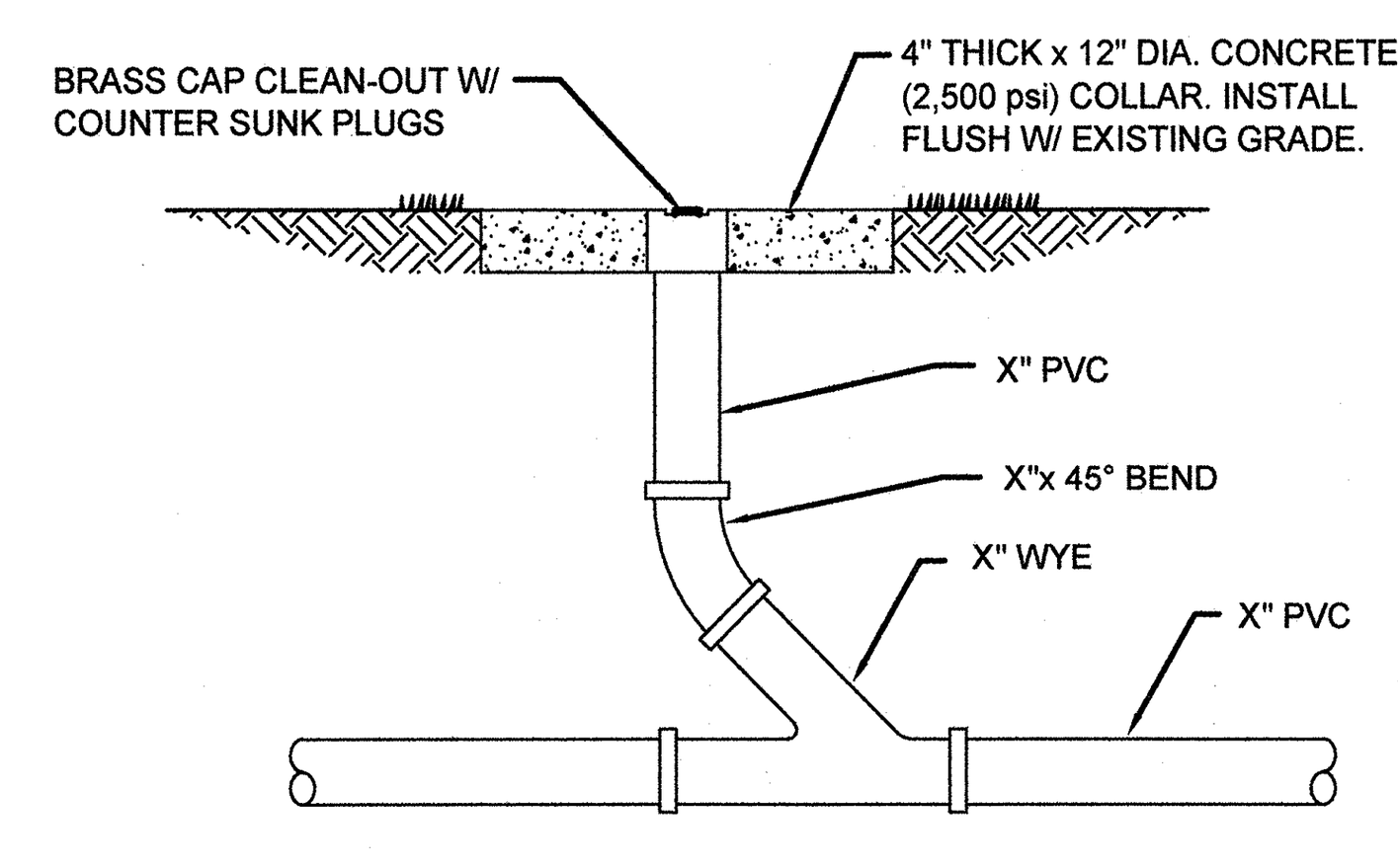

INLINE CLEAN-OUT

NOTE: CLEAN OUT TO BE FLUSH W/ CONCRETE COLLAR

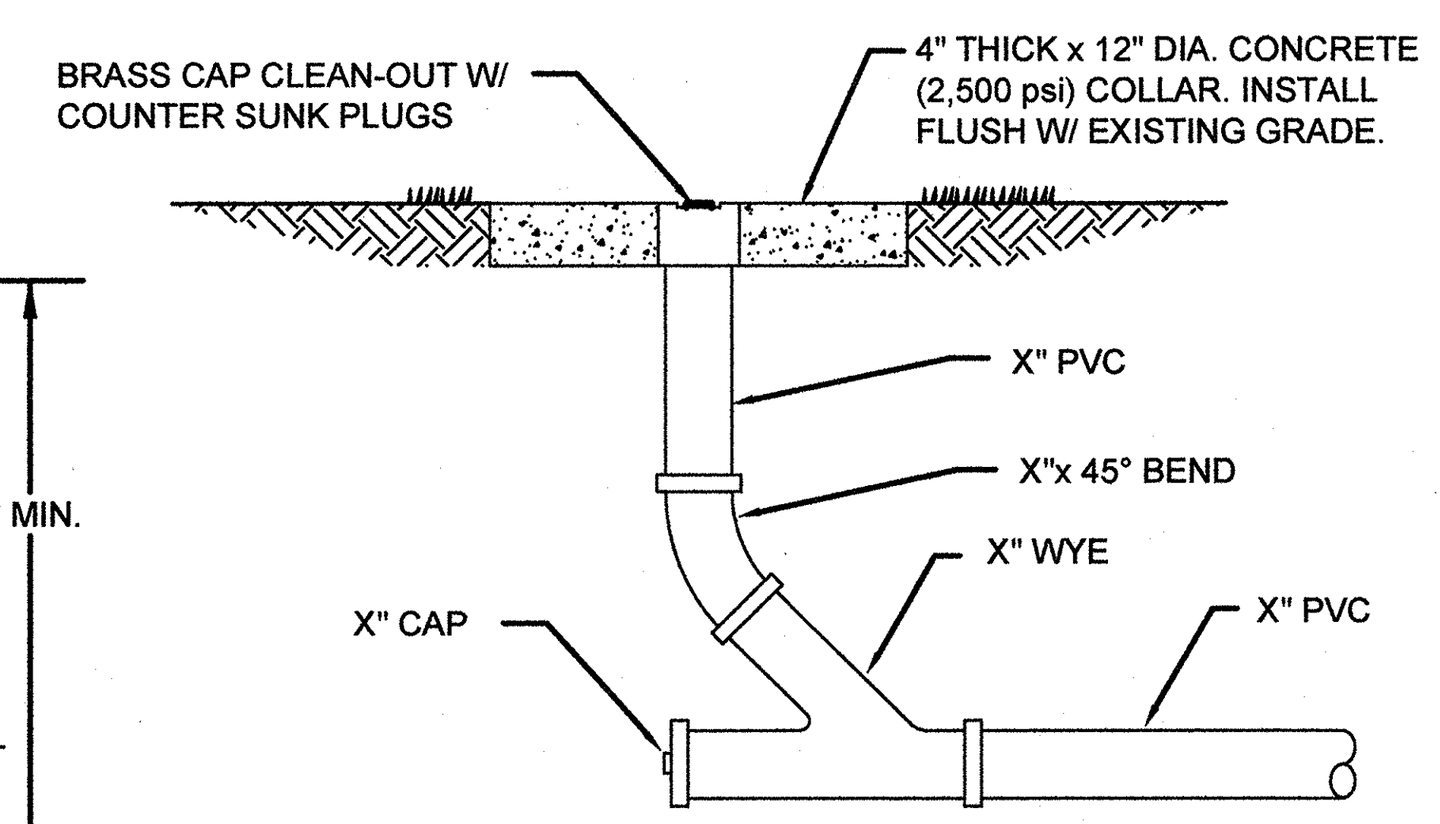

END CLEAN-OUT

NOTE: CLEAN OUT TO BE FLUSH W/ CONCRETE COLLAR SEE SITE PLAN FOR (X)

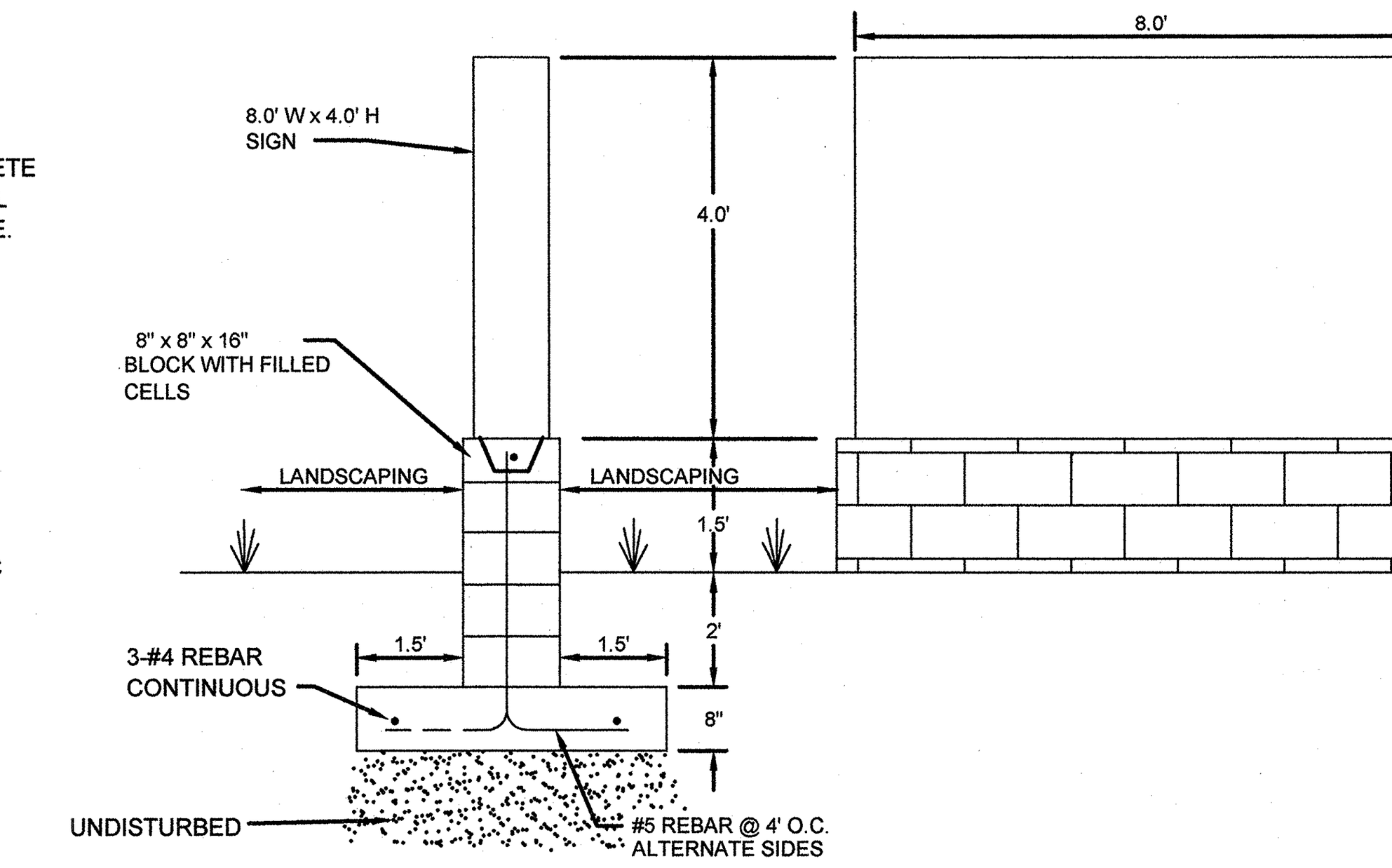

MONUMENT SIGN

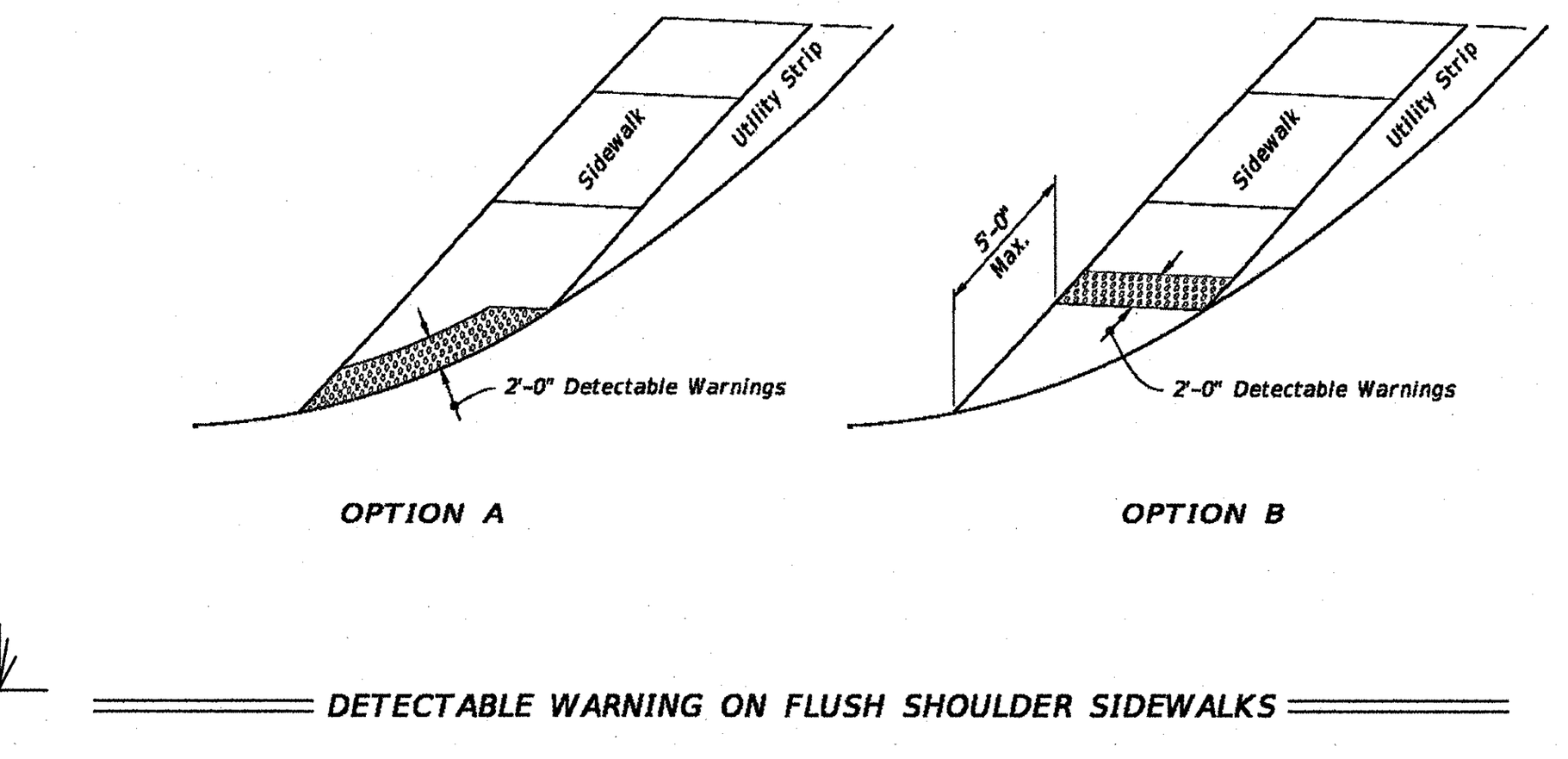

CURB RAMPS WITHOUT SIDEWALKS AND FLUSH SHOULDER SIDEWALKS

DETECTABLE WARNINGS AND SIDEWALK CURB RAMPS

FDOT FY 2019-20 STANDARD PLANS | INDEX 522-002

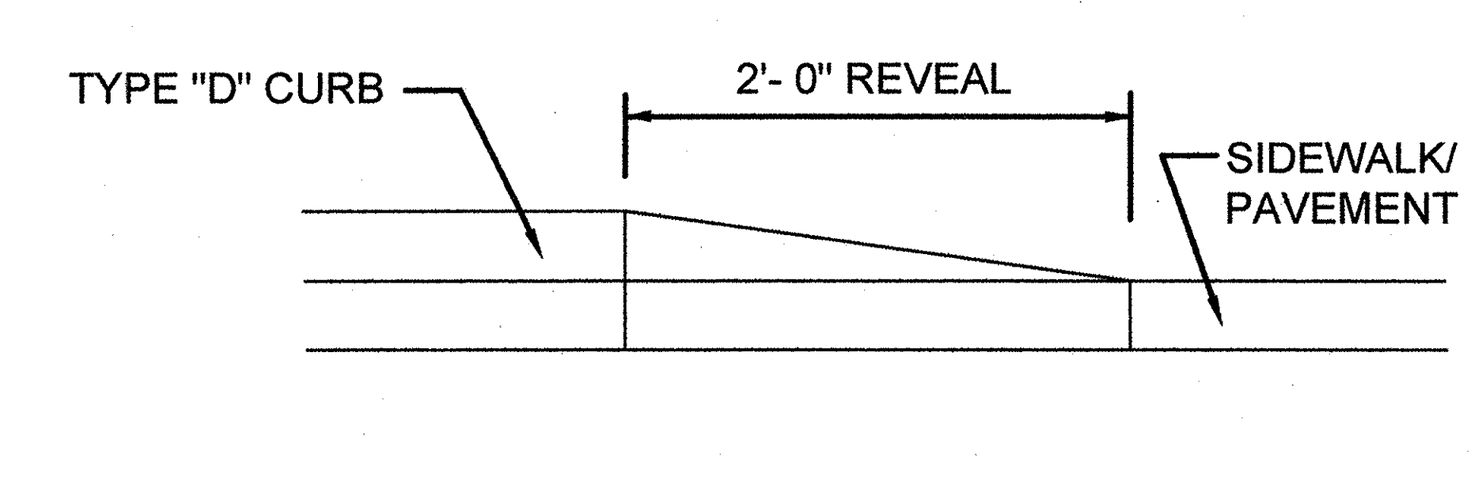

CURB REVEAL DETAIL

NOT TO SCALE

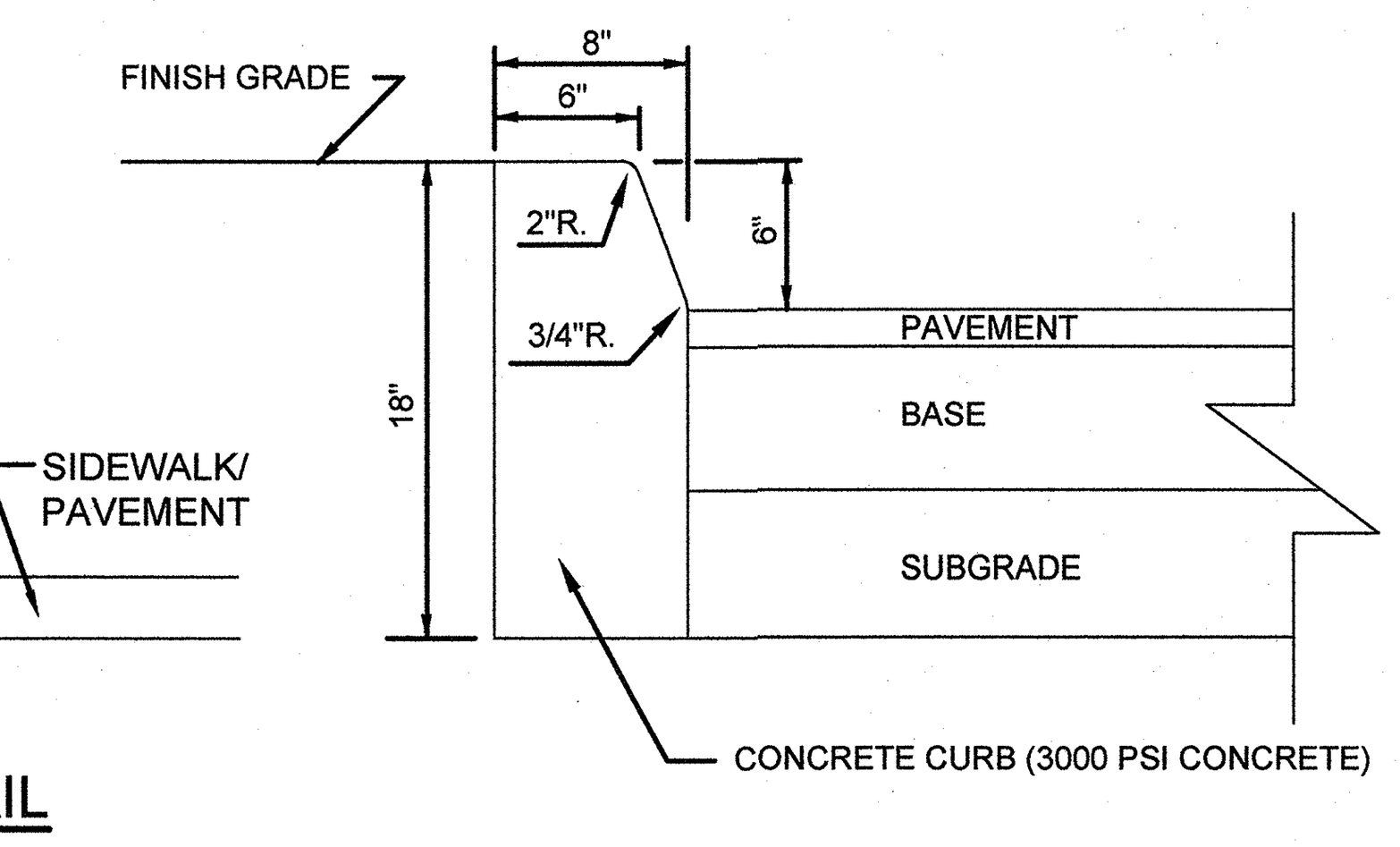

FDOT TYPE "D" CURB DETAIL

NOT TO SCALE

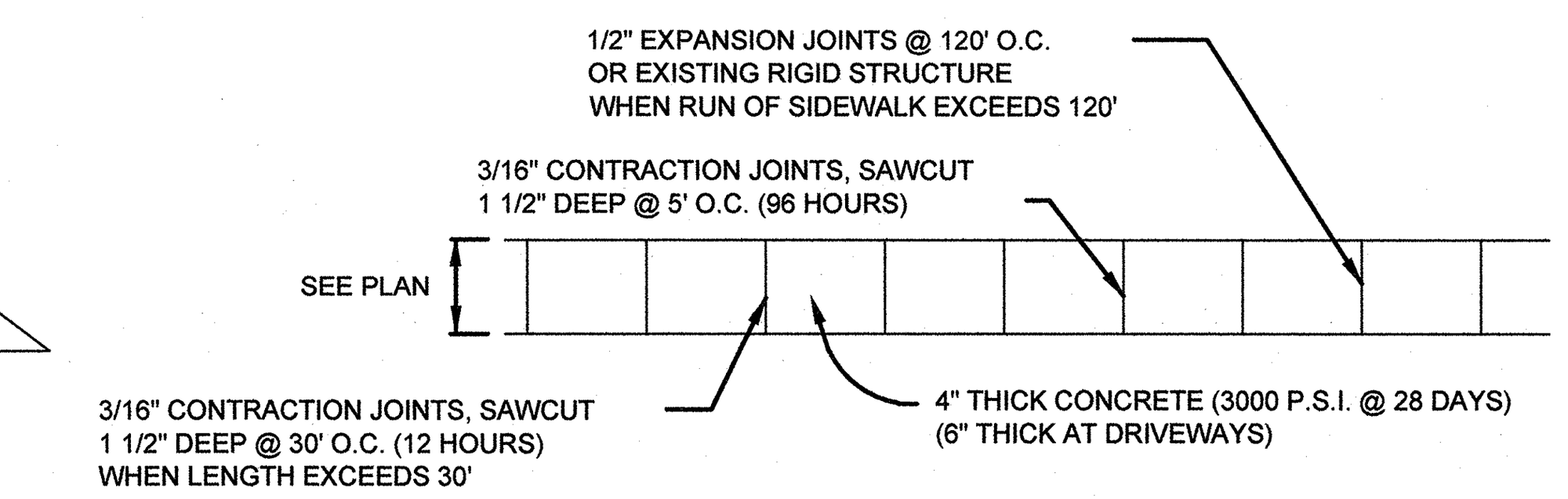

CONCRETE SIDEWALK DETAIL (FDOT INDEX #522-001)

NOT TO SCALE

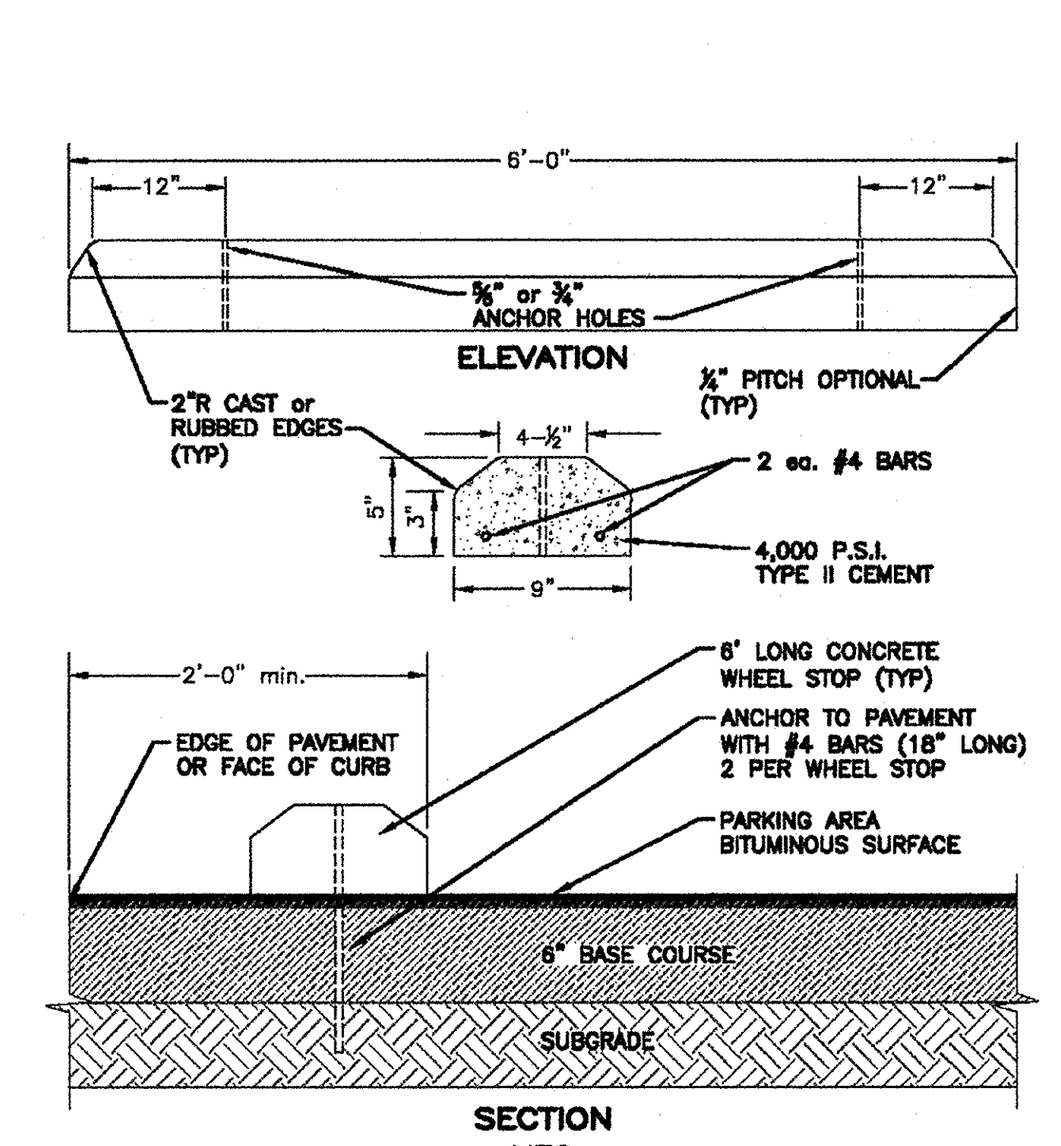

NOTES:
1. CONCRETE WHEEL STOP TO BE PRE-MANUFACTURED REINFORCED 4,000 P.S.I. TYPE II CEMENT.
2. #4 ANCHOR BAR ENDS TO BE INSTALLED FLUSH WITH TOP OF WHEEL STOP.
3. CENTER WHEEL STOP IN EACH STALL, SIDE TO SIDE.

THE CITY OF DAYTONA BEACH ENGINEERING DIVISION | PARKING SPACE WHEEL STOP DETAIL M-1 | Drawing Date: 05/2003; Drawn By: PFT; Checked By:; Scale: NTS; Revision Date: 10/2011; File Name: dbM-1

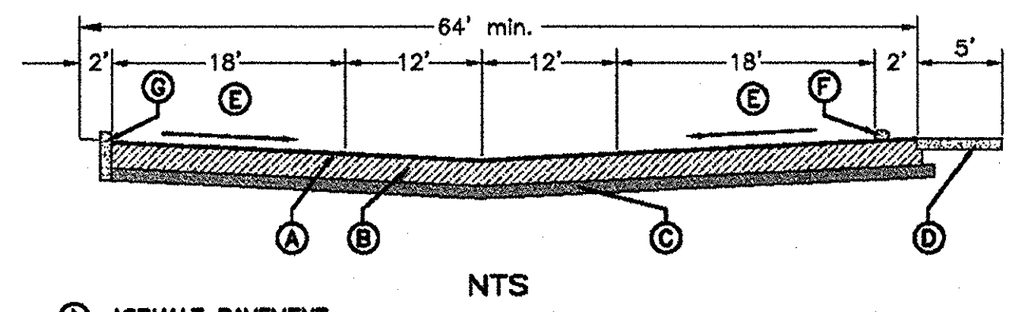

Ⓐ ASPHALT PAVEMENT:
1-½" min. ASPHALT BITUMINOUS CONCRETE TYPE SP-9.5 (SUPERPAVE) ASPHALT PAVEMENT TESTING IS TO BE DONE IN ACCORDANCE WITH FDOT STANDARD SPECIFICATIONS FOR ROAD & BRIDGE CONSTRUCTION TABLE 334-5, LATEST EDITION.

Ⓑ BASE:
6" min. RECYCLED CONCRETE BASE (LBR 130) COMPACTED TO 98% DENSITY BASED ON AASHTO T-180 MODIFIED PROCTOR TEST.

ALTERNATE 1:
6" min. ASPHALT BASE MINIMUM BEARING (LBR 100) COMPACTED TO 98% DENSITY BASED ON AASHTO T-180 MODIFIED PROCTOR TEST.

ALTERNATE 2:
8" min. LIMEROCK BASE (LBR 100) COMPACTED TO 98% DENSITY BASED ON AASHTO T-180 MODIFIED PROCTOR TEST. TO BE USED ONLY WHEN BOTTOM OF BASE LAYER IS 24" max. ABOVE ANNUAL GROUND WATER ELEVATION AND UPON APPROVAL THE OF CITY ENGINEER.

Ⓒ SUB-GRADE:
6" min. SUB-BASE COMPACTED TO 98% DENSITY BASED ON AASHTO T-180 MODIFIED PROCTOR TEST WITH MINIMUM LBR 40.

Ⓓ CONCRETE SIDEWALK 5'-0" min. WIDTH, 6" min. THICK, 3400 P.S.I. @ 28 DAYS.

Ⓔ THE MINIMUM ALLOWABLE PARKING LOT PAVEMENT SLOPE FOR ASPHALT SHALL BE NO LESS THAN 0.6% MEASURED FROM THE RECEIVING INLET OR FLUME TO ANY PAVEMENT. (NOTE THAT THE MINIMUM SLOPE MAY BE REDUCED TO 0.50% FOR CONCRETE PAVEMENT.)

Ⓕ CONCRETE WHEEL STOP (IF APPLICABLE).

Ⓖ 6" min. WIDE FDOT TYPE 'D' CURB WITH 24" min. OF UNOBSTRUCTED OVERHANG.

NOTES:
1. ALL MATERIALS ARE TO BE APPROVED BY THE CITY ENGINEER AND THE PROJECT'S LICENSED SOILS ENGINEER PRIOR TO PLACEMENT.
2. ASPHALT PAVEMENT TESTING IS TO BE DONE IN ACCORDANCE WITH FDOT STANDARD SPECIFICATIONS FOR ROAD & BRIDGE CONSTRUCTION, LATEST EDITION.

THE CITY OF DAYTONA BEACH ENGINEERING DIVISION | TYPICAL PARKING LOT SECTION DETAIL M-2 | Drawing Date: 05/2003; Drawn By: PFT; Checked By:; Scale: NTS; Revision Date: 06/2016; File Name: dbM-2

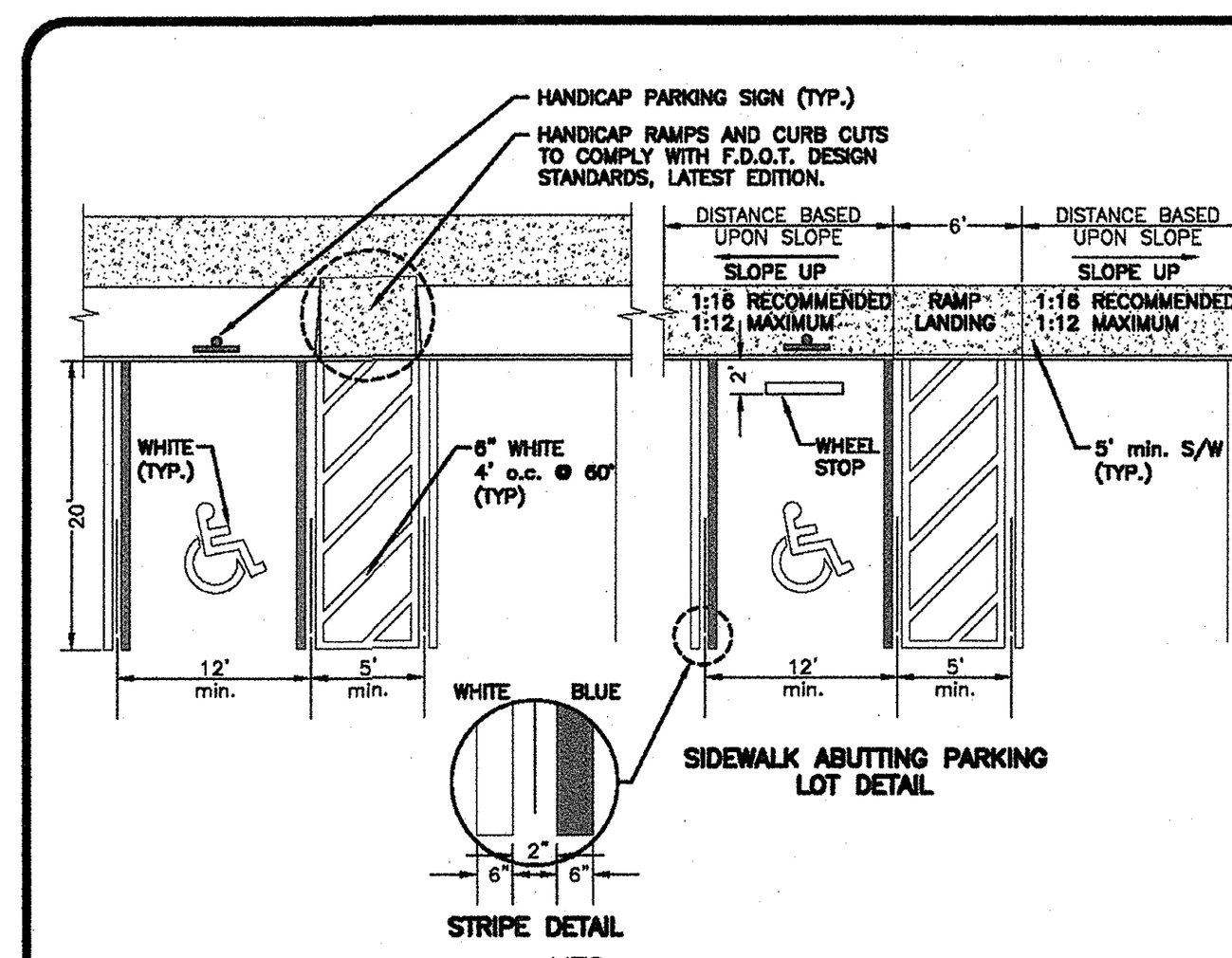

NOTES:
1. ALL HANDICAP PARKING STALLS, 5' ACCESS AISLES, HANDICAP RAMPS AND ACCESSIBLE ROUTES SHALL BE PAVED.
2. PERPENDICULAR AND DIAGONAL HANDICAP PARKING STALLS WILL BE 12'-0" WIDE AND 20'-0" LONG WITH A 5'-0" min. WIDE ACCESS AISLE ADJACENT TO EACH STALL. THE 5' ACCESS AISLE MAY BE SHARED BY TWO ADJACENT HANDICAP PARKING STALLS.
3. PARALLEL HANDICAP PARKING STALLS WILL BE 12'-0" WIDE AND 22'-0" LONG WITH A 5'-0" min. WIDE ACCESS AISLE ADJACENT TO EACH STALL.
4. ALL HANDICAP RAMPS SHALL BE OF 5'-0" min. WIDE EXCLUSIVE OF THE FLARED SIDES WITH A MAXIMUM SLOPE OF 1:21. HANDICAP RAMPS AND CURB CUTS ARE TO BE CONSTRUCTED IN ACCORDANCE WITH FDOT DESIGN STANDARDS, LATEST EDITION.
5. BLUE STRIPING SHALL BE BLUE TINT TO MATCH SHADE 15180 OF FEDERAL STANDARD 595a.
6. WHEN FDOT TYPE 'D' CURB IS USED IN LIEU OF WHEEL STOPS, SIDEWALK ABUTTING CURB SHALL BE WIDENED BY 18" min. SO THAT THE TOTAL SIDEWALK WIDTH IS 72" min. ALLOWING FOR 54" min. CLEAR ACCESSIBLE ROUTE.
7. 6' WHEEL STOPS ARE TO BE CENTERED SIDE TO SIDE IN EACH PARKING STALL, REFER TO CODB STANDARD DETAIL M-1 (dbM-1.dwg).
8. ACCESSIBLE PARKING SPACES AND ACCESS AISLES SHALL BE LEVEL WITH SURFACE SLOPES NOT EXCEEDING 1:50 (2%) IN ALL DIRECTIONS.
9. DIMENSIONS ARE CENTERLINE OF PAVEMENT MARKINGS.
10. FOR COMPLETE DETAIL OF HANDICAP SIGN INSTALLATION, REFER TO CODB STANDARD DETAIL M-6 (dbM-6.dwg).

THE CITY OF DAYTONA BEACH ENGINEERING DIVISION | HANDICAP PARKING SPACE STRIPING DETAIL M-4 | Drawing Date: 05/2003; Drawn By: PFT; Checked By:; Scale: NTS; Revision Date: 10/2011; File Name: dbM-4

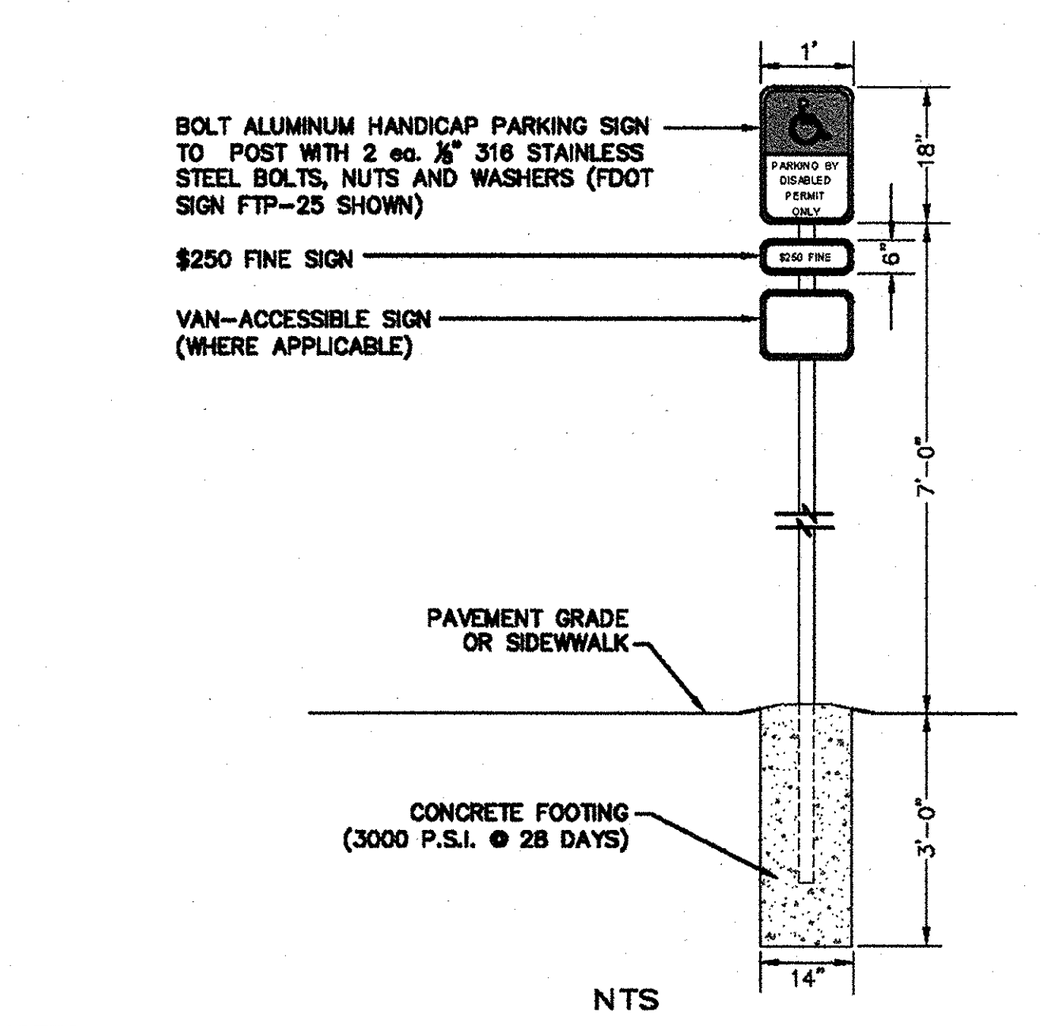

NOTES:
1. ONE SIGN IS REQUIRED FOR EACH HANDICAP PARKING STALL.
2. HANDICAP PARKING SIGN SHALL CONFORM WITH CURRENT FEDERAL, STATE LOCAL & ADA CODES & REGULATIONS, LATEST EDITION.
3. SIGNS WILL BE FABRICATED BY USING A REFLECTING COATING IN THE SYMBOL, MESSAGE AND BORDERS APPLIED TO A SHEET OF ALUMINUM (12"x 18"x 0.80").
4. MESSAGE LETTERING SHALL BE UPPER CASE (SERIES B) 2" HIGH IN ACCORDANCE WITH MANUAL ON UNIFORM TRAFFIC CONTROL DEVICES, LATEST EDITION.
5. THE SYMBOL IS COMPOSED OF TWO ELEMENTS, A WHITE WHEEL-CHAIR FIGURE (WHICH SHOULD ALWAYS FACE RIGHT) ON A SQUARE BACKGROUND, INTERNATIONAL BLUE IN COLOR (FED. STD. 595a, COLOR #15180).
6. SUPPLEMENTAL SIGN PLATES SHALL BE UPPER CASE (SERIES B) 1" BLUE OR BLACK MESSAGE LETTERING W/ ½" BLUE OR BLACK BORDER ON WHITE BACK GROUND.
7. METAL SIGN POSTS TO BE GALVANIZED U-IRON. ALL BOLTS, NUTS, WASHERS AND SCREWS MUST BE 316 STAINLESS STEEL.
8. CONCRETE FOOTING SHALL BE OF PORTLAND CEMENT AND HAVE A MINIMUM COMPRESSIVE STRENGTH OF 3000 P.S.I. @ 28 DAYS.
9. SIGN POST SHALL BE MINIMUM 2'-0" CLEAR FROM BACK OF CURB OR WHEEL STOP.
10. SIGN POST SHALL BE DESIGNED TO WITHSTAND 120 M.P.H. WIND LOAD.

THE CITY OF DAYTONA BEACH ENGINEERING DIVISION | HANDICAP PARKING SIGN DETAIL (FDOT TYPE FTP-25) M-6 | Drawing Date: 05/2003; Drawn By: PFT; Checked By: JRS; Scale: NTS; Revision Date: 10/2011; File Name: dbM-6

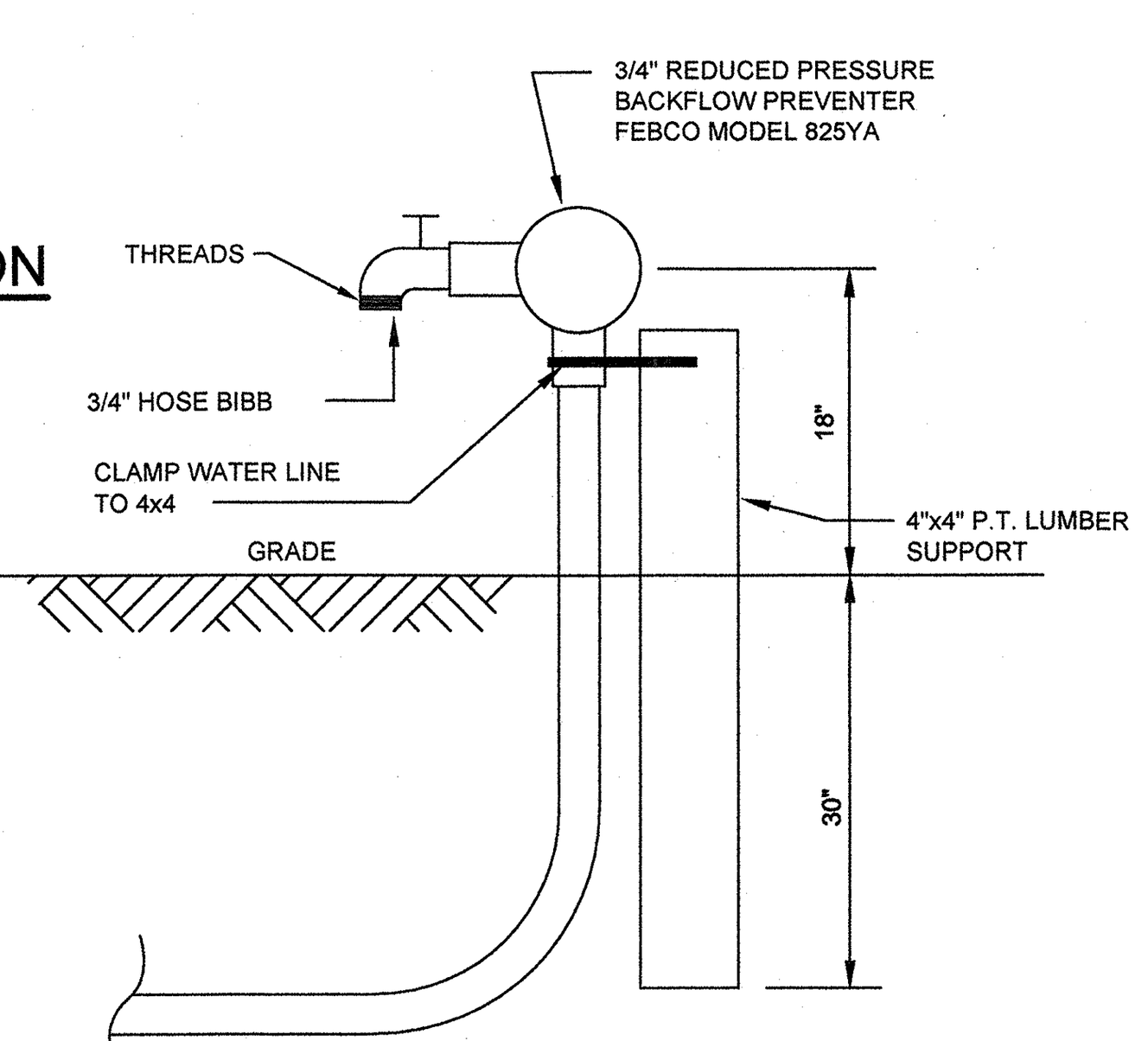

HOSE BIBB DETAIL

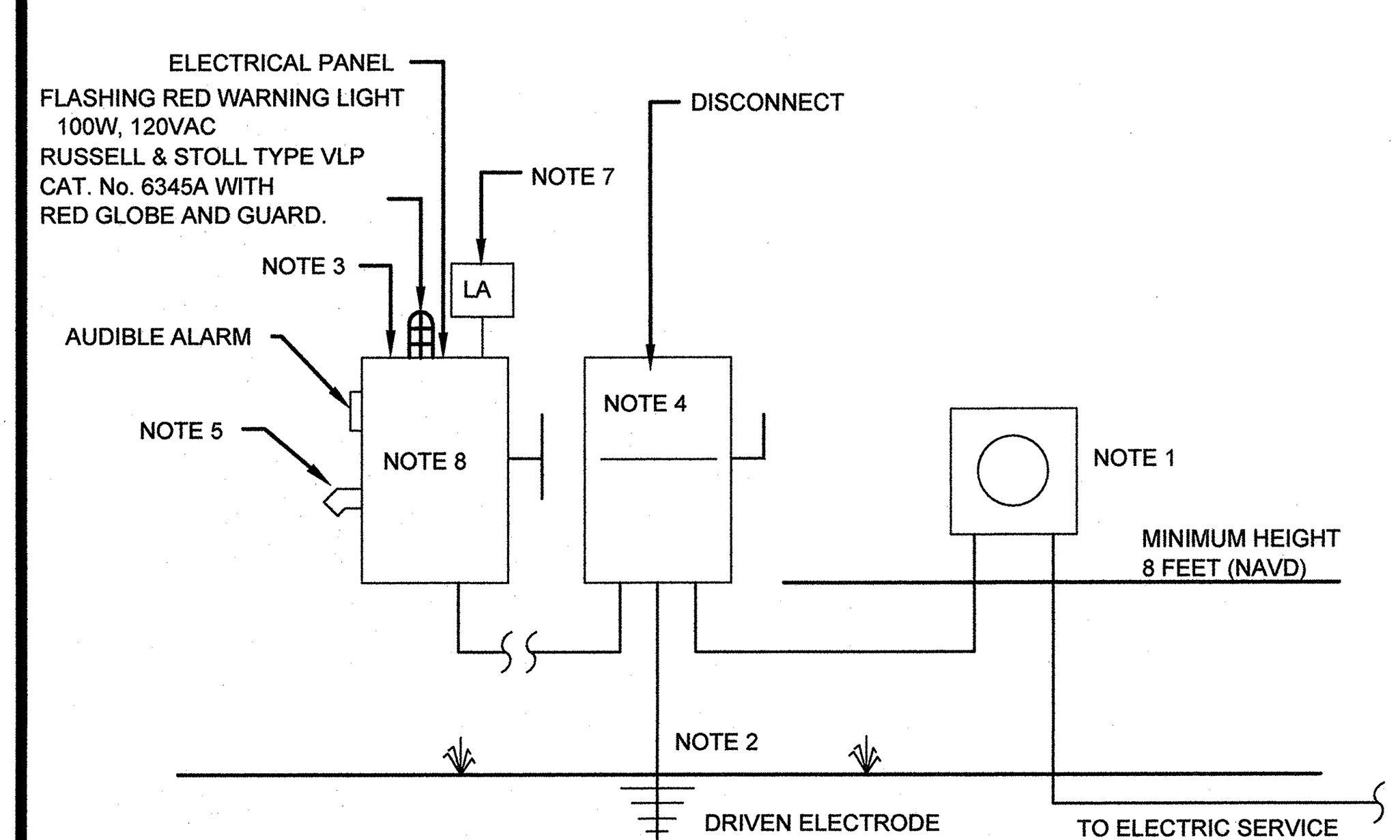

NOTES:
1. ELECTRICAL METER WITH BYPASS
2. SERVICE GROUND TO INCLUDE 3 - 10' ELECTRODES ON 10' CENTERS BOND TO SLAB REBAR. USE #4 BARE COPPER MIN.
3. ELECTRICAL PANEL IN WEATHERPROOF ENCLOSURE NEMA 3R304 STAINLESS STEEL.
4. 3 POLE S-N FUSED 240 VOLT (AMPS MAY CHANGE WITH VARIOUS APPLICATIONS) WEATHERPROOF DISCONNECT.
5. GENERATOR RECEPTACLE INLET WITH WEATHERPROOF CAP.
6. PACKAGE PUMP STATION CONTROL PANEL (INSIDE)
7. LIGHTNING ARRESTOR - SQUARE D No. SDSA 3650 TO BE INSTALLED IN PANEL.
8. P.C. PANEL BY OTHERS. PROVIDE WIRING TO SUBMERSIBLE PUMPS, LEVEL CONTROL DEVICES, & ALARM INDICATOR AS REQUIRED.

PRIVATE LIFT STATION RISER DIAGRAM

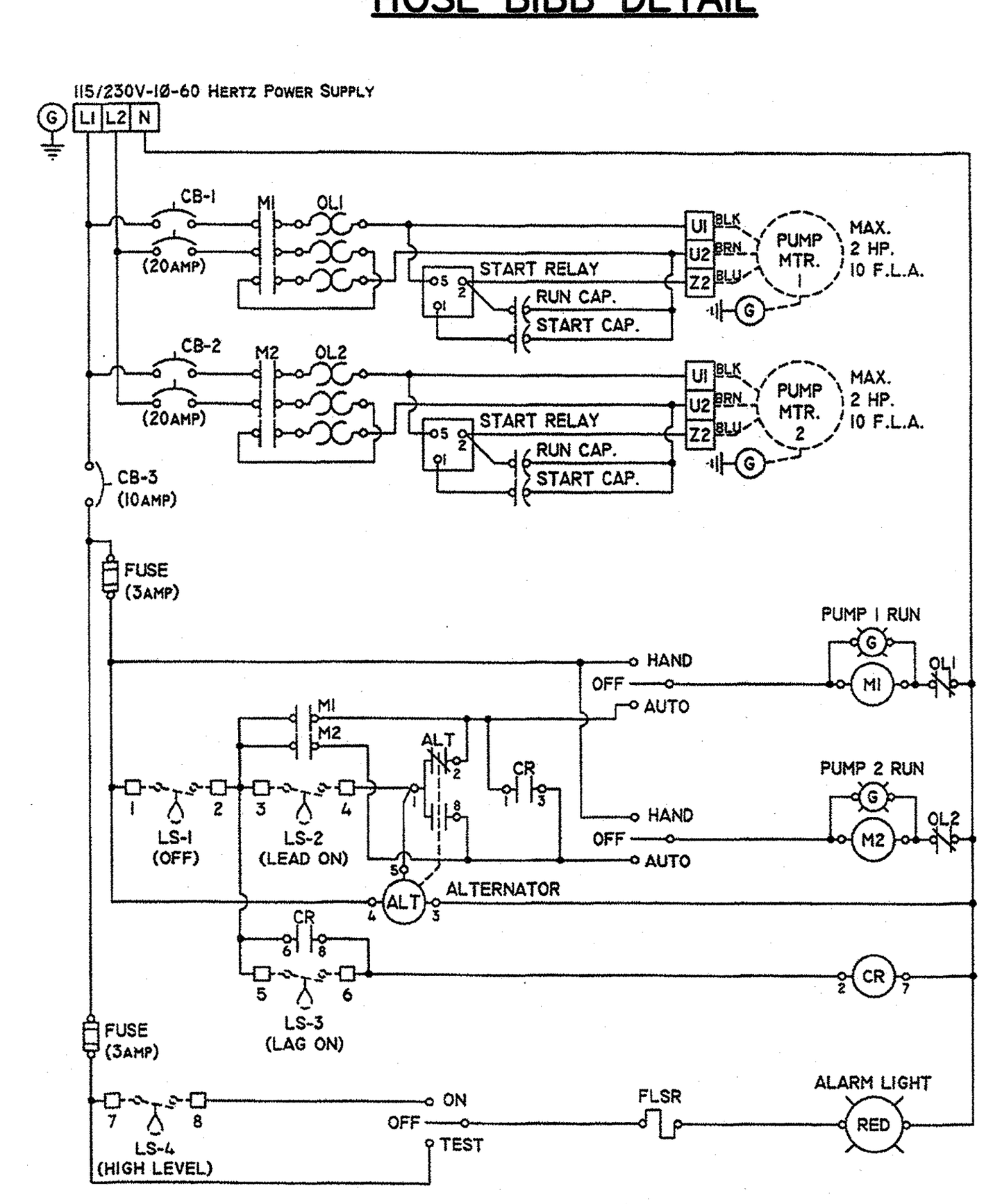

PRIVATE LIFT STATION PUMP CONTROL DIAGRAM

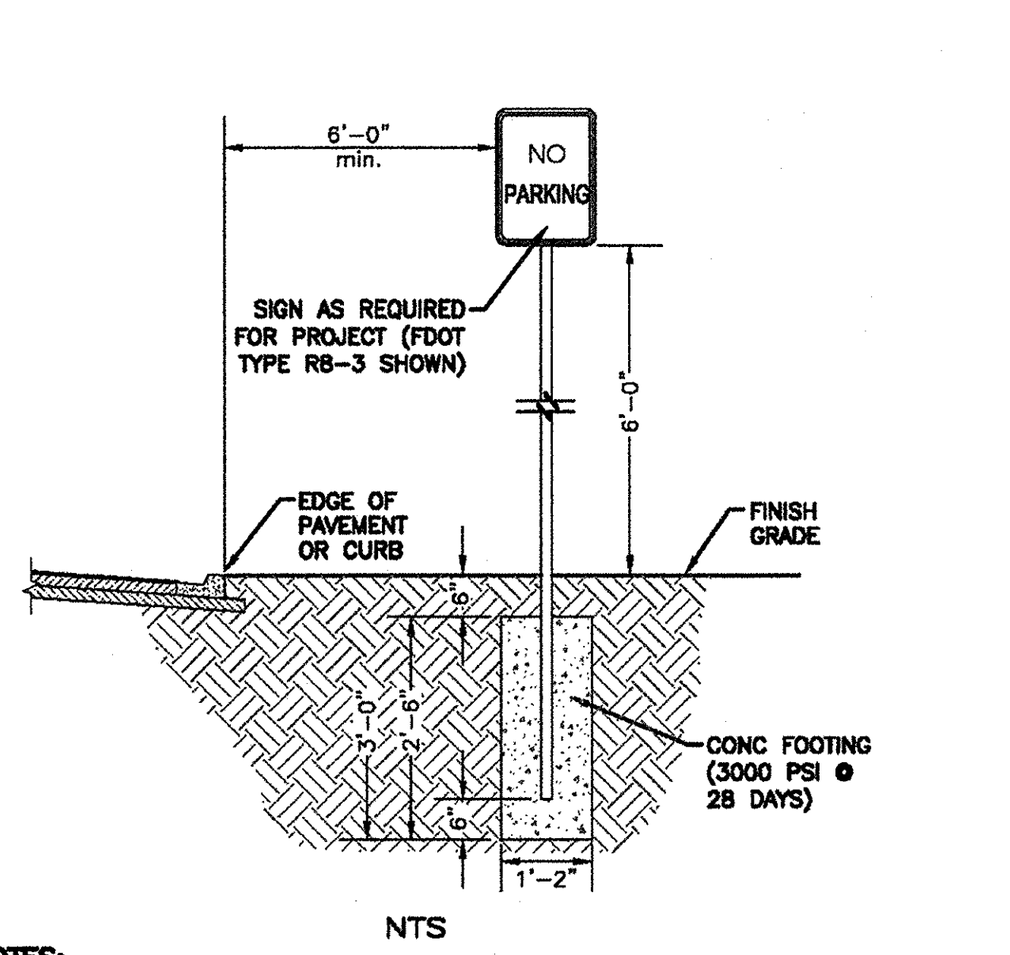

NOTES:
1. STOP SIGN SHALL CONFORM WITH CURRENT FEDERAL, STATE & LOCAL CODES & REGULATIONS, LATEST EDITION.
2. SIGNS WILL BE FABRICATED BY USING A REFLECTING COATING IN THE TEXT & BORDER APPLIED TO A SHEET ALUMINUM BACKING (0.80" IN THICKNESS).
3. MESSAGE LETTERING SHALL BE UPPER CASE (SERIES B) 2" HIGH IN ACCORDANCE WITH MANUAL ON UNIFORM TRAFFIC CONTROL DEVICES, LATEST EDITION.
4. METAL SIGN POSTS TO BE GALVANIZED U-IRON. ALL BOLTS, NUTS, WASHERS AND SCREWS MUST BE 316 STAINLESS STEEL.
5. CONCRETE FOOTING SHALL BE OF PORTLAND CEMENT AND HAVE A MINIMUM COMPRESSIVE STRENGTH OF 3000 P.S.I.
6. SIGN POST SHALL BE MINIMUM 6'-0" CLEAR FROM BACK OF CURB OR EDGE OF PAVEMENT.
7. SIGN POST SHALL BE DESIGNED TO WITHSTAND 120 M.P.H. WIND LOAD.

THE CITY OF DAYTONA BEACH ENGINEERING DIVISION | STANDARD SIGN INSTALLATION DETAIL (FDOT TYPE R11-1) T-2 | Drawing Date: 12/2003; Drawn By: PFT; Checked By:; Scale: NTS; Revision Date: 10/2011; File Name: dbT-2

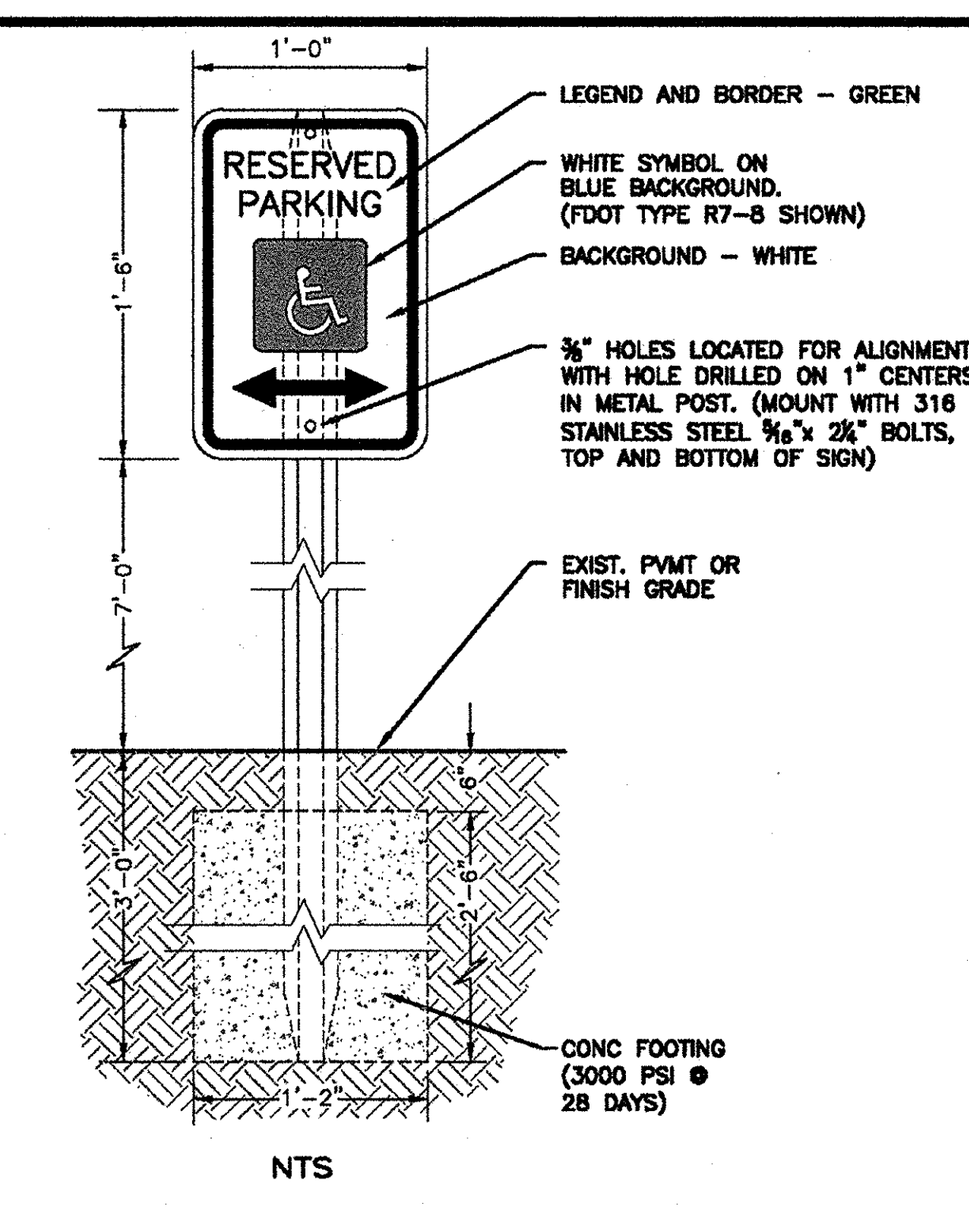

NOTES:
1. HANDICAP PARKING SIGN SHALL CONFORM WITH CURRENT FEDERAL, STATE LOCAL & ADA CODES & REGULATIONS, LATEST EDITION.
2. SIGNS WILL BE FABRICATED BY USING A REFLECTING COATING IN THE SYMBOL, MESSAGE AND BORDERS APPLIED TO A SHEET ALUMINUM BACKING (12"x18"x0.80").
3. MESSAGE LETTERING SHALL BE UPPER CASE (SERIES B) 2" HIGH IN ACCORDANCE WITH MANUAL ON UNIFORM TRAFFIC CONTROL DEVICES, LATEST EDITION.
4. THE SYMBOL IS COMPOSED OF TWO ELEMENTS, A WHITE WHEEL-CHAIR FIGURE (WHICH SHOULD ALWAYS FACE RIGHT) ON A SQUARE BACKGROUND, INTERNATIONAL BLUE IN COLOR (FED. STD. 595a, COLOR #15180).
5. METAL SIGN POSTS TO BE GALVANIZED U-IRON. ALL BOLTS, NUTS, WASHERS AND SCREWS MUST BE 316 STAINLESS STEEL.
6. CONCRETE FOOTING SHALL BE OF PORTLAND CEMENT AND HAVE A MINIMUM COMPRESSIVE STRENGTH OF 3000 P.S.I.
7. SIGN POST SHALL BE MINIMUM 2'-0" CLEAR FROM BACK OF CURB OR WHEEL STOP.
8. SIGN POST SHALL BE DESIGNED TO WITHSTAND 120 M.P.H. WIND LOAD.

THE CITY OF DAYTONA BEACH ENGINEERING DIVISION | HANDICAP PARKING SIGN DETAIL (FDOT TYPE R7-8) T-3 | Drawing Date: 12/2003; Drawn By: PFT; Checked By:; Scale: NTS; Revision Date: 10/2011; File Name: dbT-3

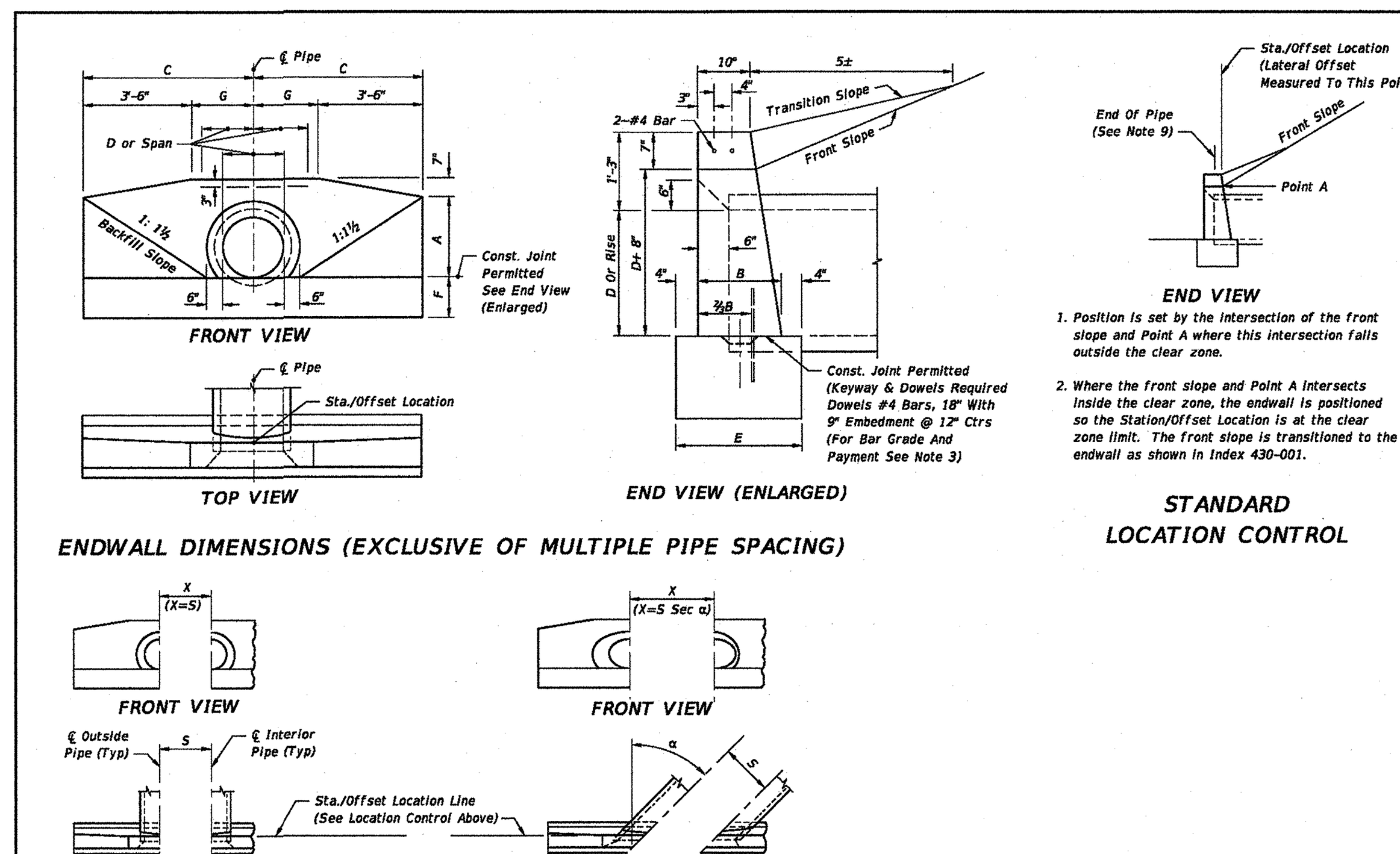

1. Position is set by the intersection of the front slope and Point A where this intersection falls outside the clear zone.
2. Where the front slope and Point A intersects inside the clear zone, the endwall is positioned so the Station/Offset Location is at the clear zone limit. The front slope is transitioned to the endwall as shown in Index 430-001.

STANDARD LOCATION CONTROL

LEGEND
α Pipe Skew
S Center To Center Pipe Spacing
X Centerline To Centerline Dimension At Face Of Headwall

PIPE AND SPACING FOR MULTIPLE PIPE ENDWALL POSITIONS FOR SINGLE AND MULTIPLE

D	Opening Area (SF) Number Of Pipes 1	2	3	4	A	B	C	E	F	G	S	X 0°	X 15°	X 30°	X 45°	Single Conc 0°	Single Metal 0°
15"	1.23	2.46	3.69	4.92	1'-11"	1'-2"	4'-0"	1'-10"	1'-2"	0'-6"	2'-7"	2'-7"	2'-8"	3'-0"	3'-8"	1.23	1.24
18"	1.77	3.54	5.31	7.08	2'-2"	1'-3"	4'-6"	1'-11"	1'-3"	1'-0"	2'-10"	2'-10"	2'-11"	3'-3"	4'-0"	1.56	1.59
21"	2.41	4.82	7.23	9.64	2'-5"	1'-4"	5'-0"	2'-0"	1'-4"	1'-6"	3'-2"	3'-2"	3'-3"	3'-8"	4'-6"	1.97	
24"	3.14	6.28	9.42	12.56	2'-8"	1'-4"	5'-6"	2'-0"	1'-4"	2'-0"	3'-5"	3'-5"	3'-6"	3'-11"	4'-10"	2.24	2.29
27"	3.98	7.96	11.94	15.92	2'-11"	1'-5"	6'-0"	2'-1"	1'-5"	2'-6"	3'-10"	3'-10"	4'-0"	4'-5"	5'-5"	2.73	
30"	4.91	9.82	14.73	19.64	3'-2"	1'-6"	6'-6"	2'-2"	1'-6"	3'-0"	4'-3"	4'-3"	4'-5"	4'-11"	6'-0"	3.26	3.34
36"	7.07	14.14	21.21	28.28	3'-8"	1'-8"	7'-6"	2'-4"	1'-8"	4'-0"	5'-1"	5'-1"	5'-3"	5'-10"	7'-2"	4.53	4.64
42"	9.62	19.24	28.86	38.48	4'-2"	1'-10"	8'-6"	2'-6"	2'-0"	5'-0"	6'-0"	6'-0"	6'-3"	6'-11"	8'-6"	6.33	6.49
48"	12.57	25.14	37.71	50.28	4'-8"	2'-1"	9'-6"	2'-9"	2'-0"	6'-0"	6'-9"	6'-9"	7'-0"	7'-10"	9'-7"	8.15	8.38
54"	15.90	31.80	47.70	63.60	5'-2"	2'-6"	10'-6"	3'-2"	2'-3"	7'-0"	7'-8"	7'-8"	7'-11"	8'-10"	10'-10"	11.71	11.77

GENERAL NOTES
1. Endwall dimensions, locations and positions are for round and elliptical concrete pipe and for round and pipe-arch corrugated metal pipe. Round concrete pipe shown.
2. Front slope and ditch transitions shall be in accordance with Index 430-001.
3. Endwalls may be ... Reinforcing steel ... reinforcement nec... determined by the ... reinforcement sh... Concrete, (Endwal...
4. All exposed corne... chamfered ¾".
5. Concrete shall be ... concrete may be ... in plants meeting ... Specifications.
6. On outfall ditches ... 20' transitions fr... right of way pern...
7. For sodding arou...
8. Payment for concrete quantities for endwalls skewed to the pipe shall be made on the following basis:

Endwall Skew to Pipe	Use Tabulated Value
0° to 5°	0°
6°	15°
16°	30°
31° or over	45°

9. Pipe length plan quantities shall be based on the pipe end locations shown in the standard location control end view, or lengths based on special endwall locations called for in the plans.
10. Payment for pipe in pipe culverts shall be based on plan quantities, adjusted for endwall locations subsequently established by the Engineer.
11. Endwalls to be paid for under the contract unit price for Class I Concrete (Endwalls), CY.

LAST REVISION 11/01/17 | REVISION | DESCRIPTION: | FDOT FY 2019-20 STANDARD PLANS | STRAIGHT CONCRETE ENDWALLS SINGLE AND MULTIPLE PIPE | INDEX 430-030 | SHEET 1 of 2

DEVELOPMENT REVIEW
City of Daytona Beach
APPROVAL OF: SP
DATE: ______ FILE: ______
DEV2019-128

APPROVED
JAN 30 2020
DEVELOPMENT SERVICES
City of Daytona Beach

NO.	DATE	APPR.	REVISION
3	10/23/19	JHH	REVISED PER COUNTY COMMENTS DATED 10/21/19
2	10/15/19	JHH	REVISED PER CODB COMMENTS DATED 9/25/19
1	9/23/19	JHH	REVISED PER COUNTY COMMENTS DATED 8/20/19

THE PERFORMANCE GROUP
CIVIL ENGINEERING / PLANNING / DEVELOPMENT
JOSEPH H. HOPKINS, P.E. NO. 48059
LICENSED BUSINESS CERTIFICATION NO. 7175
100 MARINA POINT DR. DAYTONA BEACH, FL 32114
PHONE: (386)239-7166 FAX: (386)239-7120

CONSTRUCTION DETAILS

DME SPORTS, LLC

NOT RELEASED FOR CONSTRUCTION

Digitally signed by Joseph H Hopkins
DN: C=US, O=Unaffiliated, OU=A01410C0000016D83FDFA8F0000437F, CN=Joseph H Hopkins
Reason: I am the author of this document
Location: 100 Marina Point Dr. Daytona Beach, FL 32114
Date: 2020-01-08 11:00:27
Foxit PhantomPDF Version: 9.6.0
JOSEPH HUGH HOPKINS LICENSE NO. 48059 STATE OF FLORIDA PROFESSIONAL ENGINEER
THIS ITEM HAS BEEN DIGITALLY SIGNED AND SEALED BY JOSEPH H. HOPKINS, P.E. ON THE DATE ADJACENT TO THE SEAL. PRINTED COPIES OF THIS DOCUMENT ARE NOT CONSIDERED SIGNED AND SEALED AND THE SIGNATURE MUST BE VERIFIED ON ANY ELECTRONIC COPIES.
LIC. 48059 BUS. CERT. LIC. 7175

SCALE:	NONE
DESIGNED:	JHH
DRAWN:	KMP
DATE:	1/8/19
PROJECT NO.	250

250-REV SITE PLAN 2019 2B

SHEET C8 OF 10

DEVELOPMENT REVIEW
City of Daytona Beach
APPROVAL OF: CP
APPROVED
JAN 30 2020
DEVELOPMENT SERVICES
City of Daytona Beach
DATE: _____ FILE: _____
DEV2019-128

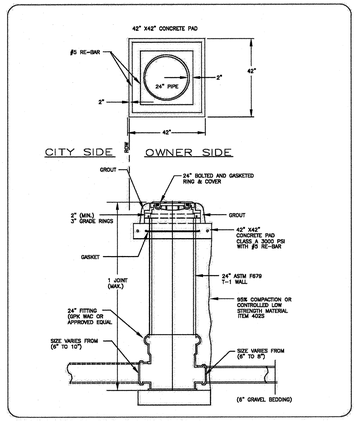

THE CITY OF DAYTONA BEACH UTILITIES DEPARTMENT — ALTERNATE COMMERCIAL SANITARY LATERAL NON-TRAFFIC BEARING DETAIL S-9 B — Fil-19/20

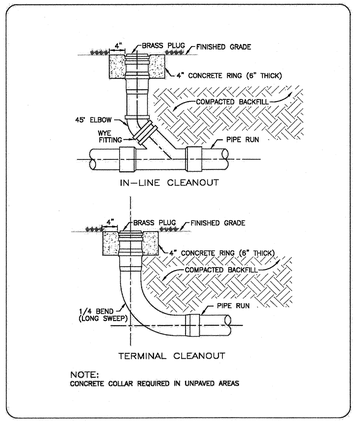

NOTE:
CONCRETE COLLAR REQUIRED IN UNPAVED AREAS

THE CITY OF DAYTONA BEACH UTILITIES DEPARTMENT — SANITARY LATERAL CLEANOUT DETAIL S-10 — Fil-19/20

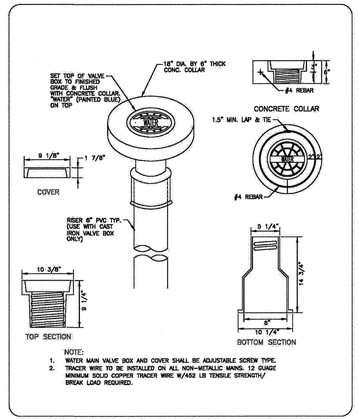

NOTE:
1. WATER MAIN VALVE BOX AND COVER SHALL BE ADJUSTABLE SCREW TYPE.
2. TRACER WIRE TO BE INSTALLED ON ALL NON-METALLIC MAINS. 12 GUAGE MINIMUM SOLID COPPER TRACER WIRE W/452 LB TENSILE STRENGTH/ BREAK LOAD REQUIRED.

THE CITY OF DAYTONA BEACH UTILITIES DEPARTMENT — MAIN VALVE BOX DETAIL W-15 — Fil-19/20

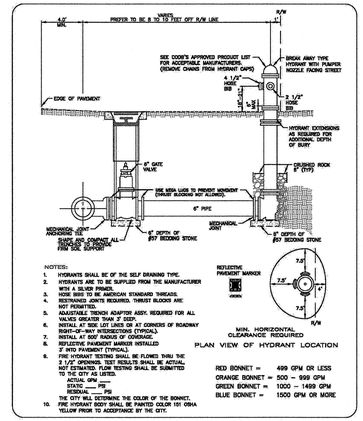

NOTES:
1. HYDRANTS SHALL BE 6" THE MJF DRAWING TYPE.
2. HYDRANTS ARE TO BE SUPPLIED FROM THE MANUFACTURER WITH A 5½" VALVE.
3. NOZZLES TO BE AMERICAN STANDARD THREADS.
4. RESTRAINED JOINTS REQUIRED. THRUST BLOCKS ARE NOT PERMITTED.
5. ADJUSTABLE TRENCH ADAPTOR ASSY. REQUIRED FOR ALL VALVES GREATER THAN 5' DEEP.
6. INSTALL AT SIDE LOT LINES OR AT CORNERS OF ROADWAY RIGHTS-OF-WAY INTERSECTIONS (TYPICAL).
7. SET TOP OF HYDRANT 6" ABOVE GRADE.
8. REFLECTIVE PAVEMENT MARKER INSTALLED 3' INTO PAVEMENT (TYPICAL).
9. FIRE HYDRANT TESTING SHALL BE FLOWED THRU THE 2 1/2" OPENINGS. TEST RESULTS SHALL BE ACTUAL, NOT ESTIMATED. FLOW TESTING SHALL BE SUBMITTED TO THE CITY AS LISTED.
   STATIC GPM ____
   RESIDUAL ____ PSI
   RESIDUAL ____ PSI
   THE CITY WILL DETERMINE THE COLOR OF THE BONNECT.
10. FIRE HYDRANT BODY SHALL BE PAINTED COLOR 101 OSHA YELLOW PRIOR TO ACCEPTANCE BY THE CITY.

RED BONNET = 499 GPM OR LESS
ORANGE BONNET = 500 – 999 GPM
GREEN BONNET = 1000 – 1499 GPM
BLUE BONNET = 1500 GPM OR MORE

THE CITY OF DAYTONA BEACH UTILITIES DEPARTMENT — FIRE HYDRANT ASSEMBLY DETAIL W-16 — Fil-19/20

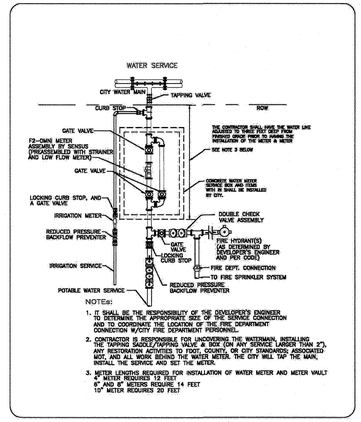

NOTES:
1. IT SHALL BE THE RESPONSIBILITY OF THE DEVELOPER'S ENGINEER TO DETERMINE THE APPROPRIATE SIZE OF THE SERVICE CONNECTION AND TO COORDINATE THE LOCATION OF THE FIRE DEPARTMENT CONNECTION W/CITY/ FIRE DEPARTMENT PERSONNEL.
2. CONTRACTOR IS RESPONSIBLE FOR UNCOVERING THE WATERMAIN, INSTALLING THE TAPPING SADDLE/TAPPING VALVE & BOX (ON ANY SERVICE LARGER THAN 2"), ANY RESTRAINT ACTIVITIES TO THAT POINT, TESTING AND DISINFECTING ASSOCIATED BOTH, AND ALL WORK BEHIND THE METER. THE CITY WILL TAP THE MAIN, INSTALL THE SERVICE AND SET THE METER.
3. METER LENGTHS REQUIRED FOR INSTALLATION OF WATER METER AND METER VAULT 2" AND 3" METERS REQUIRE 14 FEET
   1" METER REQUIRES 20 FEET

THE CITY OF DAYTONA BEACH UTILITIES DEPARTMENT — FIRE/DOMESTIC/IRRIGATION CONNECTION DETAIL W-17 — Fil-19/20

LOCATION OF PUBLIC WATER SYSTEM MAINS IN ACCORDANCE WITH F.A.C. RULE 62-555.314

Other Pipe	Horizontal Separation	Crossings (1)	Joint Spacing @ Crossings (Full Joint Centered)
Storm Sewer, Stormwater Force Main, Reclaimed Water (2)	Water Main — 3 ft. minimum	Water Main — 12 inches is the minimum, except for storm sewer, then 6 inches is the minimum and 12 inches is preferred	Alternate 3 ft. minimum: Water Main
Vacuum Sanitary Sewer	Water Main — 10 ft. preferred 3 ft. minimum	Water Main — 12 inches is preferred 6 inches minimum	Alternate 3 ft. minimum: Water Main
Gravity or Pressure Sanitary Sewer, Sanitary Sewer Force Main, and Water (3)	Water Main — 10 ft. preferred 6 ft. minimum (3)	12 inches is the minimum, except for gravity sewer, then 6 inches is the minimum and 12 inches is preferred	Alternate 3 ft. minimum: Water Main
On-Site Sewage Treatment & Disposal System	10 ft. minimum.	---	---

(1) Water main should cross above other pipe. Where water main must be below other pipe, the minimum separation is 12 inches.
(2) Reclaimed water regulated under Part III of Chapter 62-610, F.A.C.
(3) 3 ft. for gravity sanitary sewer where the bottom of the water main is laid at least 6 inches above the top of the gravity sanitary sewer.
(4) Reclaimed water not regulated under Part III of Chapter 62-610, F.A.C.

Disclaimer: This document is provided for your convenience only. Please refer to F.A.C. Rule 62-555.314 for additional construction requirements.

THE CITY OF DAYTONA BEACH UTILITIES DEPARTMENT — WATER MAIN SEPARATION CHART W-8 — Fil-19/20

NO.	DATE	APPR.	REVISION
3	10/23/19	JHH	REVISED PER COUNTY COMMENTS DATED 10/21/19
2	10/15/19	JHH	REVISED PER COBB COMMENTS DATED 9/25/19
1	9/23/19	JHH	REVISED PER COUNTY COMMENTS DATED 8/20/19

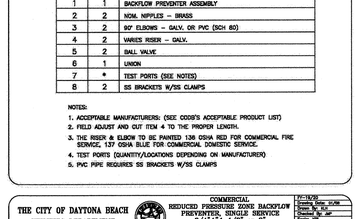

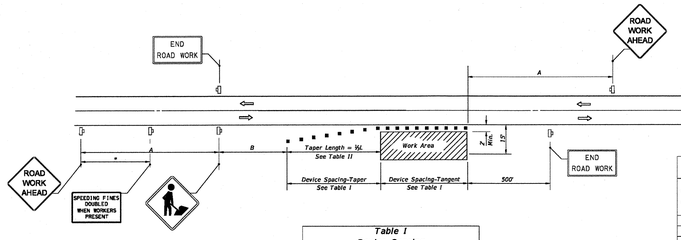

Table I
Device Spacing

Speed (mph)	Max. Distance Between Devices (ft.)			
	Cones or Tubular Markers		Type I or Type II Barricades or Vertical Panels or Drums	
	Taper	Tangent	Taper	Tangent
25	25	50	25	50
30 to 45	25	50	30	50
50 to 70	25	50	50	100

Table II
Taper Length - Shoulder

Speed (mph)	½L (ft)			Notes
	8' Shldr.	10' Shldr.	12' Shldr.	
25	28	35	42	L=WS²/60
30	40	50	60	
35	55	68	82	
40	72	90	107	L=WS
45	130	150	180	
50	133	167	200	
55	147	183	220	
60	160	200	240	
65	173	217	260	
70	187	233	280	

8' minimum shoulder width

½L = Length of shoulder taper in feet

W = Width of total shoulder in feet (combined paved and unpaved width)

S = Posted speed limit (mph)

DISTANCE BETWEEN SIGNS

Speed	Spacing (ft.)	
	A	B
40 mph or less	200	200
45 mph	350	350
50 mph or greater	500	500

*Sideway between signs.

SYMBOLS

- Work Area
- Channelizing Device (See Index 102-600)
- Work Zone Sign
- Lane Identification + Direction of Traffic

GENERAL NOTES

1. When four or more work vehicles enter the through traffic lanes in a one hour period or less (excluding establishing and terminating the work area), the advanced FLAGGER sign shall be substituted for the WORKERS sign. For location of Flaggers and FLAGGER signs, see Index 102-603.
2. SHOULDER WORK sign may be used as an alternate to the WORKER symbol sign only on the side where the shoulder work is being performed.
3. When a side road intersects the highway within the TTC zone, additional TTC devices shall be placed in accordance with other applicable TCZ Indexes.
4. For general TCZ requirements and additional information, refer to Index 102-600.

DURATION NOTES

1. Signs and channelizing devices may be omitted if all of the following conditions are met:
   a. Work operations are 60 minutes or less.
   b. Vehicles in the work area have high-intensity, rotating, flashing, oscillating, or strobe lights operating.

CONDITIONS

WHERE ANY VEHICLE, EQUIPMENT, WORKERS OR THEIR ACTIVITIES ENCROACH THE AREA CLOSER THAN 15' BUT NOT CLOSER THAN 2' TO THE EDGE OF TRAVEL WAY.

LAST REVISION 11/01/17	REVISION	DESCRIPTION:	FDOT FY 2019-20 STANDARD PLANS	TWO-LANE, TWO-WAY, WORK ON SHOULDER	INDEX 102-602	SHEET 1 of 1

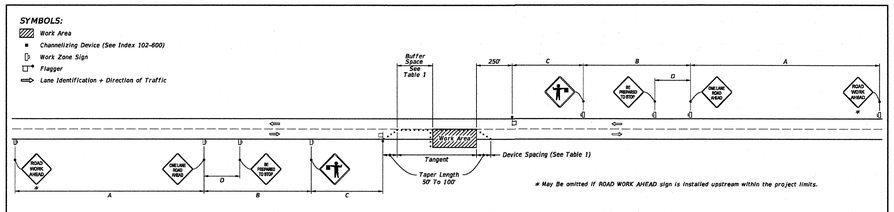

GENERAL NOTES:

1. Special Conditions may be required in accordance with these notes and the following sheets:
   A. Railroad Crossings:
      a. If an active railroad crossing is located closer to the Work Area than the queue length plus 300 feet, extend the Buffer Space as shown on Sheet 3.
      b. If the queuing of vehicles across an active railroad crossing cannot be avoided, provide a uniformed traffic control officer or flagger at the highway-rail grade crossing to prevent vehicles from stopping within the highway-rail grade crossing, even if automatic train warning devices are in place.
   B. If the Work Area encroaches on the Centerline, use the Layout for Temporary Lane Shift to Shoulder on Sheet 3 only if the Existing Paved Shoulder width is sufficient to provide for an 11' lane between the Work Area and the Edge of Existing Paved Shoulder. Reduce the posted speed when appropriate.
2. Temporary Raised Rumble Strips:
   A. Use when both of the following conditions are met concurrently:
      a. Existing Posted Speed is 55 mph or greater;
      b. Work duration is greater than 60 minutes.
   B. Use a consistent Strip color throughout the work zone.
   C. Place each Rumble Strip Set transversely across the lane at locations shown.
   D. Use Option 1 or Option 2 as shown on Sheet 3. Use only one option throughout work zone.
3. Additional one-way control may be provided by the following means:
   A. Flag-carrying vehicle;
   B. Official vehicle;
   C. Pilot vehicles;
   D. Traffic signals.

   When flaggers are the sole means of one-way control, the flaggers must be in sight of each other or in direct communication at all times.
4. When a side road intersects the highway within the TTC zone, place additional TTC devices in accordance with other applicable TCZ Indexes.
5. The two channelizing devices directly in front of the work area may be omitted provided vehicles in the work area have high-intensity rotating, flashing, oscillating, or strobe lights operating.
6. When Buffer Space cannot be attained due to geometric constraints, use the greatest attainable length, not less than 200 ft, for posted speeds greater than 25 mph.
7. ROAD WORK AHEAD and the BE PREPARED TO STOP signs may be omitted if all of the following conditions are met:
   A. Work operations are 60 minutes or less.
   B. Speed limit is 45 mph or less.
   C. There are no sight obstructions to vehicles approaching the work area for a distance equal to the Buffer Space shown in Table 1.
   D. Vehicles in the work area have high-intensity, rotating, flashing, oscillating, or strobe lights operating.
   E. Volume and complexity of the roadway has been constered.
   F. If a railroad crossing is present, vehicles will not queue across rail tracks.
   G. AFADs are not in use.
8. See Index 102-600 for general TCZ requirements and additional information.
9. Automated Flagger Assistance Devices (AFADs) may be used in accordance with Specifications Section 102, 990 and the APL vendor drawings.

TABLE 1
DEVICE SPACING

Posted Speed	Maximum Spacing of Cones or Tubular Markers		Maximum Spacing of Type I or Type II Barricades/Panels/Drums		Distance Between Signs				Buffer Space
	On a Taper	On a Tangent	On a Taper	On a Tangent	A	B	C	D	
25	20'	50'	20'	50'	200'	200'	200'	100'	155'
30	20'	50'	20'	50'	200'	200'	200'	100'	200'
35	20'	50'	20'	50'	200'	200'	200'	100'	250'
40	20'	50'	20'	50'	200'	200'	200'	100'	305'
45	20'	50'	20'	50'	350'	350'	350'	175'	360'
50	20'	50'	20'	100'	500'	500'	500'	250'	425'
55	20'	50'	20'	100'	2640'	1500'	1000'	500'	495'
60	20'	50'	20'	100'	2640'	1500'	1000'	500'	570'
65	20'	50'	20'	100'	2640'	1500'	1000'	500'	645'
70	20'	50'	20'	100'	2640'	1500'	1000'	500'	730'

CONDITIONS

WHERE ANY VEHICLE, EQUIPMENT, WORKERS OR THEIR ACTIVITIES ENCROACH THE AREA BETWEEN THE CENTERLINE AND A LINE 2' OUTSIDE THE EDGE OF TRAVEL WAY.

LAST REVISION 11/01/17	REVISION	DESCRIPTION:	FDOT FY 2019-20 STANDARD PLANS	TWO-LANE, TWO-WAY, WORK WITHIN THE TRAVEL WAY	INDEX 102-603	SHEET 1 of 3

VOLUSIA COUNTY NOTES:

1. NOTIFY VOLUSIA COUNTY DEVELOPMENT ENGINEERING DIVISION AT 386-736-5928 24 HOURS PRIOR TO THE START OF CONSTRUCTION.
2. VOLUSIA COUNTY TRAFFIC ENGINEERING IS NOT A MEMBER OF THE SUNSHINE ONE CALL. CONTACT TRAFFIC ENGINEERING AT 386-736-5968 TWO BUSINESS DAYS PRIOR TO WORK TO LOCATE FIBER THAT RUNS BETWEENSIGNALS AND LOOPS.
3. DRIVING AND/OR STAGIN OF CONSTRUCTION VEHICLES IS NOT PERMITTED ON ANY SIDEWALKS IN THE RIGHT-OF-WAY. ANY DAMAGE TO SIDEWALKS WILL BE REPAIRED AND/OR REPLACED IN LIKE KIND BY THE CONTRACTOR.
4. ANY SIDEWALK, LANE OR ROAD CLOSURE (INCLUDING FLAGGING OPERATIONS) REQUIRES REVIEW AND APPROVAL IN ADVANCE AND A SEVEN (7) DAY MINIMUM NOTICE TO VOLUSIA COUNTY TRAFFIC OPERATIONS (386-239-6535).
5. OFFSITE PAVEMENT SPECIFICATIONS:
   CONCRETE:
   6" FDOT CLASS1 PORTLAND CEMENT CONCRETE (3000 PSI @ 28 DAYS, 5" SLUMP)
   12" CLEAN STABILIZED SAN SUBGRADE (MIN. 98% COMPACTIN, AASHTO T-180)
   EXPANSION AND CONTRACTION JOINTS SHALL BE INSTALLED IN ACCORDANCE WITH PCA RECOMMENDATION.
   ASPHALT:
   1½" TYPE SIII ASPHALTIC CONCRETE STRUCTURE COURSE (MIN.98% COMPACTION, NUCLEAR DENSITY BACK SCATTER METHOD),
   8" LIMEROCK BASE (LBR 100 MIN. 98% COMPACTION, AASHTO T-180)
   10" STABILIZED SUBGRADE (LBR 40 MIN. 98% COMPACTION, AASHTO T-180)

DEVELOPMENT REVIEW
City of Daytona Beach
APPROVAL OF: JR
DATE _____ FILE: _____
DEV2019-128

APPROVED
JAN 30 2020
DEVELOPMENT SERVICES
City of Daytona Beach

NO.	DATE	APPR.	REVISION
3	10/23/19	JHH	REVISED PER COUNTY COMMENTS DATED 10/21/19
2	10/15/19	JHH	REVISED PER CODB COMMENTS DATED 9/25/19
1	9/23/19	JHH	REVISED PER COUNTY COMMENTS DATED 8/20/19

THE PERFORMANCE GROUP
CIVIL ENGINEERING / PLANNING / DEVELOPMENT
JOSEPH H. HOPKINS, P.E. NO. 48059
LICENSED BUSINESS CERTIFICATION NO. 7175
100 MARINA POINT DR. DAYTONA BEACH, FL 32114
PHONE: (386)239-7166 FAX: (386)239-7120

MAINTENANCE OF TRAFFIC

DME SPORTS, LLC

NOT RELEASED FOR CONSTRUCTION

JOSEPH HUGH HOPKINS LICENSE NO. 48059 STATE OF FLORIDA PROFESSIONAL ENGINEER

THIS ITEM HAS BEEN DIGITALLY SIGNED AND SEALED BY JOSEPH H. HOPKINS, P.E. ON THE DATE ADJACENT TO THE SEAL. PRINTED COPIES OF THIS DOCUMENT ARE NOT CONSIDERED SIGNED AND SEALED AND THE SIGNATURE MUST BE VERIFIED ON ANY ELECTRONIC COPIES.

Digitally signed by Joseph H Hopkins
DN: C=US, O=Unaffiliated, OU=A01410C0000016D83FDFA8F0000437F, CN=Joseph H Hopkins
Reason: I am the author of this document
Location: 100 Marina Point Dr. Daytona Beach, FL 32114
Date: 2020-01-03 13:09:33
Foxit PhantomPDF Version: 9.6.0

SCALE:	NONE
DESIGNED:	JHH
DRAWN:	KMP
DATE:	1/8/19
PROJECT NO.	
250	
250-REV SITE PLAN 2019 2B	
SHEET	C10 OF 10

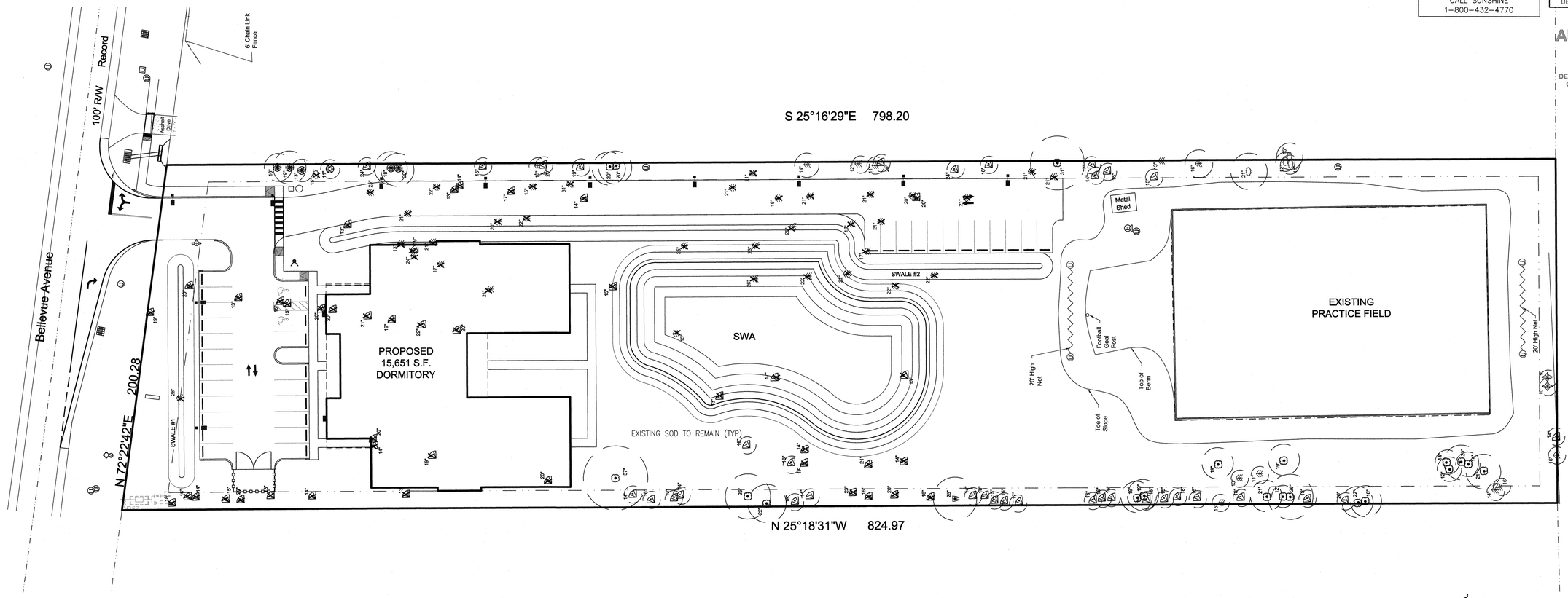

48 HOURS
BEFORE YOU DIG
"CALL SUNSHINE"
1-800-432-4770

CITY OF DAYTONA BEACH
DEVELOPMENT REVIEW
City of Daytona Beach
APPROVAL OF: SP
DATE: _____ FILE: _____
STAMP OF APPROVAL
DEV2019-128

APPROVED
JAN 30 2020
DEVELOPMENT SERVICES
City of Daytona Beach

NO.	DATE	APPR.	REVISION
1	12/17/2019	J.S.	REV PER HANNAH COMMENTS OF 12/13/2019

THE PERFORMANCE GROUP
CIVIL ENGINEERING / PLANNING / DEVELOPMENT
JOSEPH H. HOPKINS, P.E. NO. 48059
LICENSED BUSINESS CERTIFICATION NO. 7175
100 MARINA POINT DR., DAYTONA BEACH, FL 32114
PHONE: (386)239-7160 FAX: (386)236-7120

TREE REMOVAL CALCULATIONS

DME SPORTS, LLC

NOT RELEASED FOR CONSTRUCTION

TREE REMOVAL

	HACK		OAK		PALM		SWTGM		CHNBRY	
10"	0	0	0	0	0	0	0	0	0	0
11"	0	0	0	0	0	0	0	0	0	0
12"	0	0	0	0	0	0	0	0	0	0
13"	0	0	0	0	6	78"	0	0	0	0
14"	0	0	0	0	7	98"	0	0	0	0
15"	1	15"	0	0	4	60"	0	0	0	0
16"	0	0	0	0	2	32"	0	0	0	0
17"	0	0	0	0	2	34"	0	0	0	0
18"	0	0	0	0	1	18"	0	0	0	0
19"	0	0	0	0	3	57"	0	0	0	0
20"	0	0	0	0	6	120"	0	0	0	0
21"	0	0	0	0	1	21"	0	0	0	0
22"	0	0	0	0	0	0	0	0	0	0
23"	0	0	0	0	1	23"	0	0	0	0
24"	0	0	0	0	0	0	0	0	0	0
25"	0	0	0	0	0	0	0	0	0	0
26"	0	0	0	0	0	0	0	0	0	0
27"	0	0	0	0	0	0	0	0	0	0
28"	0	0	0	0	0	0	0	0	0	0
29"	0	0	0	0	0	0	0	0	0	0
30"	0	0	0	0	0	0	0	0	0	0
31"	0	0	0	0	0	0	0	0	0	0
TOTAL # TREES REMOVED	1		0		33		0		0	
# INCHES REMOVED	15"		0"		541"		0"		0"	

EXISTING TREES TO REMAIN

	HACK		OAK		PALM		SWTGM		CHNBRY	
10"	0	0	0	0	0	0	0	0	1	10"
11"	1	11"	0	0	0	0	1	11"	0	0
12"	1	12"	2	24"	0	0	0	0	0	0
13"	0	0	0	0	1	13"	1	13"	0	0
14"	0	0	2	28"	6	84"	0	0	0	0
15"	1	15"	0	0	8	135"	0	0	0	0
16"	0	0	0	0	6	96"	1	16"	0	0
17"	0	0	0	0	2	34"	0	0	0	0
18"	0	0	1	18"	5	90"	1	18"	0	0
19"	0	0	4	76"	1	19"	1	19"	0	0
20"	0	0	3	60"	3	60"	1	20"	0	0
21"	1	21"	2	42"	0	0	0	0	0	0
22"	0	0	2	44"	0	0	0	0	0	0
23"	0	0	0	0	0	0	0	0	0	0
24"	0	0	0	0	2	48"	0	0	0	0
25"	0	0	0	0	0	0	0	0	0	0
26"	0	0	2	52"	0	0	0	0	0	0
27"	0	0	0	0	0	0	0	0	0	0
28"	0	0	0	0	0	0	0	0	0	0
29"	0	0	0	0	0	0	0	0	0	0
30"	0	0	0	0	0	0	0	0	0	0
31"	0	0	1	31"	0	0	0	0	0	0
37"	0	0	1	37"	0	0	0	0	0	0
TOTAL # TREES REMAIN	4		20		34		6		1	
# INCHES REMAIN	59"		412""		579"		97"		10"	

SITE TREE REQUIREMENTS

PROJECT ACREAGE 159,719.12 SF (3.67 AC)

REQUIRED
FIFTEEN-PERCENT (15%) OF SITE COVERED WITH TREES (23,957.87 SF)

PROVIDED
24,693 sf (15.4%)

SPECIMEN TREE CALCULATIONS (1)

NINETY-FOUR (94) SPECIMEN TREES (12"+ CAL) ON SITE (25.6 TREES / ACRE)

REQUIRED
FOUR (4) TREES / ACRE RETAINED (14 TREES)

PROVIDED
TWENTY-NINE (29) TREES (8 TREES / ACRE RETAINED)

SIX-INCHES (6") PRESERVED TREE DIAMETER REQUIRED PER 2,500 sf
383.33" REQUIRED 578"+ PROVIDED

EXISTING TREE LEGEND:

- OAK
- PINE
- PALM
- HACKBERRY
- SWEETGUM
- CHINABERRY
- CHINESE TALLOW
- AUSTRALIAN PINE

NOTE:
Number beside tree indicates diameter at 4.5' Above Grade.
- Specimen Tree (ALL TREES 12"+)
(Pines and Palms are not considered Specimen Trees)
All trees may not be present.

EXISTING TREE TO BE REMOVED

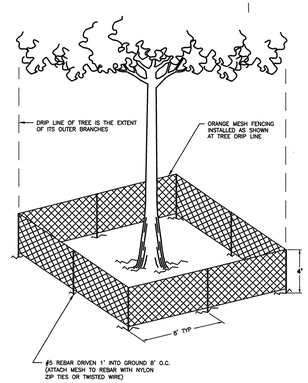

STANDARD CONSTRUCTION DETAIL
TREE BARRICADE
NTS



GRAPHIC SCALE: 1"= 30'

THE STERN DESIGN GROUP, P.A.
LANDSCAPE ARCHITECTS LAND PLANNERS
1685 Promenade Circle, Port Orange, Florida 32129
(386) 788-3788 CELL (386) 290-6411
SternDesignGroup@att.net
JanStern@SternDesignGroup.com

JAN B. STERN ASLA #1663
FLORIDA REGISTERED LANDSCAPE ARCHITECT
NOT VALID WITHOUT ELECTRONIC SEAL

Digitally signed by Jan B Stern
Date: 2020.01.07 14:56:57 -05'00'

SCALE:	
DESIGNED:	JS
DRAWN:	JS
DATE:	7/30/19
PROJECT NO.	250
SHEET	L-1 OF 4

CITY OF DAYTONA BEACH LAND DEVELOPMENT CODE LANDSCAPE CALCULATIONS			PROPERTY LOCATED IN A RE-DEVELOPMENT AREA			
TREE TYPE ARTICLE 6 SECTION 6.4	MINIMUM STANDARDS	LINEAR FEET	REQUIRED SHADE TREE	REQUIRED SMALL TREE	PROVIDED SHADE TREE	PROVIDED SMALL TREE
NORTH, EAST, AND WEST PERIMETER SHADE TREES	ONE(1) PER FORTY (40) LINEAR FEET (LF)	1,823.45 LF	46		17(33) EXIST PALMS (31) EXIST SHADE	(0) EXIST SMALL
PERIMETER SMALL TREES	ONE(1) PER EIGHTY (80) LINEAR FEET (LF)	1,823.45 LF		23		
SOUTH PERIMETER SHADE TREES	ONE(1) PER FORTY (40) LINEAR FEET (LF)	198 LF	5		(3.5) EXIST SHADE (2) PROVIDED	
SOUTH PERIMETER SMALL TREES	ONE(1) PER EIGHTY (80) LINEAR FEET (LF)	198 LF		3		(3) PROVIDED

MINIMUM SHRUB/GROUND COVER/ VINE AREA	TOTAL LANDSCAPE AREA	TOTAL SHRUBS/GROUND COVERS VINE AREA
25% OF THE TOTAL LANDSCAPE AREA VEHICULAR GREENS-SPACE AREA 22,262.51 sf VEHICULAR USE AREA (VUA) REQUIRED 2,226.2 sf (10%) GREENSPACE PROVIDED 2,271.6 sf (10.2%) GREENSPACE	80,628.92 S.F. REQUIRED: 20,157.23 S.F. (25%) TOTAL FLOWERING LANDSCAPING ADJACENT TO RIGHT-OF-WAY (ROW) 176.74 LF 4,418.5 SF (5) TREES /100 LF (9) TREES PROVIDED FLOWERING PLANTS ADJACENT TO RIGHT-OF-WAY (ROW), SIGNAGE, DRIVEWAYS, BLDG CORNERS (ETC) REQUIRED 1,105 SF (25%) PROVIDED 1.400 SF (31%)	PROVIDED: 20,457 S.F. (25.4%) 3

2

EXISTING TREE LEGEND:

- OAK
- PINE
- PALM
- HACKBERRY
- SWEETGUM
- CHINABERRY
- CHINESE TALLOW
- AUSTRAILIAN PINE
- EXISTING TREE TO BE REMOVED

NOTE:
Number beside tree indicates diameter at 4.5' Above Grade.
• Specimen Tree
All trees may not be present.

48 HOURS BEFORE YOU DIG "CALL SUNSHINE" 1-800-432-4770

CITY OF DAYTONA BEACH
DEVELOPMENT REVIEW
City of Daytona Beach
APPROVAL OF: SP
DATE: FILE:
STAMP OF APPROVAL DEV2019-128

APPROVED
JAN 30 2020
DEVELOPMENT SERVICES
City of Daytona Beach

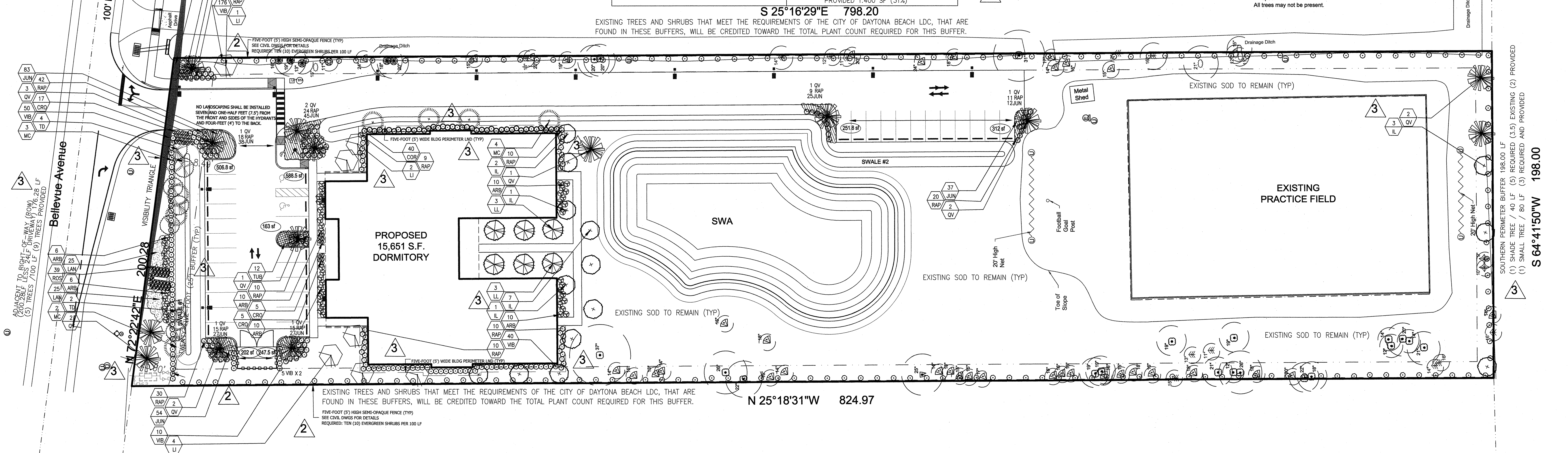

GENERAL NOTES

ALL PLANT MATERIAL THAT IS INSTALLED MUST BE FLORIDA NO.1 GRADE OR BETTER ACCORDING TO THE CURRENT GRADES AND STANDARDS FOR NURSERY PLANTS, STATE OF FLORIDA, DEPARTMENT OF AGRICULTURE.

ANY VARIATIONS FROM THE APPROVED LANDSCAPE PLAN MUST BE INITIALLY REVIEWED BY THIS LANDSCAPE ARCHITECT PRIOR TO ANY PROPOSED REVISIONS TO THE LANDSCAPE PLANTING PLAN. FAILURE TO COMPLY WITH THIS PROCEDURE MAY RESULT IN REQUIRED MITIGATION AND/OR DELAY OF THIS PROJECT.

ALL FILL DIRT TO BE PLACED IN THE PROPOSED LANDSCAPE AREAS AND/OR BERMS, MUST HAVE A pH RANGE BETWEEN 5.5 AND 7.5, BE ORGANIC IN NATURE, FREE OF ROCKS AND DEBRIS, AND MATCH NATIVE EXISITNG SOILS.

CURVLINEAR LANDSCAPE BEDS ARE TO BE EDGED WITH SMOOTH FLOWING CURVES. STRAIGHT-LINE LANDSCAPE BEDS ARE TO BE EDGED IN A STRAIGHT LINE AND MUST BE PARRALLEL TO PARKING LOTS, WALKWAYS, AND/OR STRUCTURES UNLESS INTENTIONALLY DESIGNED TO MEANDER.

BAHIA 'ARGENTINE' SOLID SOD IS TO BE USED IN ALL NON-IRRIGATED OPEN SODDED AREAS AS SHOWN ON THIS PLAN AND THE LANDSCAPE IRRIGATION PLAN. ALL OPEN SPACE AREAS, INCLUDING BUT NOT LIMITED TO ALL DISTURBED AREAS, RETENTION AREAS, AREAS SUBJECT TO POSSIBLE EROSION, RIGHT-OF WAYS (R.O.W.), ETC, SHALL ALSO BE SODDED WITH BAHIA 'ARGENTINE' SOLID SOD OR SOLID BERMUDA SOD. ALSO, REFERENCE AND SEE CIVIL ENGINEERING DWGS FOR SODDING LIMITATIONS OF SOD AT WET AND/OR DRY RETENTION AREAS, AND THE EDGE OF PAVEMENTS AND R.O.W. ST. AUGUSTINE SOLID SOD IN IRRIGATED AREAS SUCH AS FRONTS OF BUILDINGS AND PARKING ISLANDS.

THERE IS A WORKING EXISTING IRRIGATION SYSTEM FOR THE SITE. IT SHALL BE MODIFIED TO MEET THE NEW LAYOUT AND TO MEET SECTION 808.04 OF THE VOLUSIA CODE.

REMOVE ALL NON-BIODEGRADABLE NYLON TREE BALL STRAPPING AND REMOVE THE BURLAP FROM THE TOPS OF ALL ROOTBALLS THAT ARE B&B (BURLAPPED AND BALLED) IF CONTAINER TREES ARE NOT INSTALLED. ALSO, REMOVE THE TREE BALL HOISTING BASKET HOOKS. SEE TREE PLANTING DETAIL.

ALL IRRIGATION BACK-FLOW DEVICES WILL BE VISUALLY SCREENED WITH LANDSCAPING AND PAINTED BLACK AND/OR NILE GREEN. MODIFY ALL SHRUB PLANTINGS AND IRRIGATION HEAD LAYOUT FOR EXISTING TREE AND PALMS ON SITE DESIGNED TO REMAIN.

A MINIMUM FIVE-FOOT (5') GRASS RING SHALL BE INSTALLED AROUND EACH CATCH BASIN LOCATED WITHIN ANY LANDSCAPE AREA. THE CONTRACTOR IS TO BE SURE THAT NO MULCH CAN FLOW INTO THESE BASINS.

THE CONTRACTOR IS RESPONSIBLE FOR MAINTAINING ANY PROPOSED TREES AND SHRUBS TO BE PRESERVED. SEE TREE PROTECTION DETAIL. NO VEHICLES OR MATERIALS SHALL BE PLACED UNDER OR AROUND THESE TREES TO REMAIN.

ALL EXISTING SHRUBS, GROUND COVERS AND TREES NOT SHOWN TO REMAIN ARE TO BE REMOVED ALONG WITH THEIR ROOT SYSTEM. ALL UNDERBRUSH, STUMPS, AND DEAD BRANCHES ARE TO BE REMOVED ON ALL EXISTING REMAINING TREES AND PALMS. ALL WORK AROUND SPECIMEN TREES WILL BE LIMITED TO HAND LABOR AND TOOLS.

ALL EVASIVE EXOTIC PLANTS, AS LISTED ON THE FLORIDA EXOTIC PEST PLANT COUNCIL'S INVASIVE PLANT SPECIES LIST, SHALL BE REMOVED. THIS SHALL INCLUDE ALL BRAZILIAN PEPPER WHICH MAY BE EXISTING. ONE (1) EXISTING CAMPHOR TREE HAVE BEEN REMOVED.

ALL EXISTING HARDSCAPE SURFACES WHICH ARE SHOWN TO BE REMOVED, SHALL HAVE THEIR LIMEROCK AND/OR COMPACTED BASES REMOVED DOWN TO THE NATIVE SOIL BASE.

THE LOCATION OF ALL REQUIRED TREES MUST NOT CONFLICT WITH THE LIGHTING FIXTURES, SIGNS, UNDERGROUND AND OVERHEAD UTILITIES, FIRE HYDRANTS, ETC.

ALL TREES NOT LOCATED WITHIN A MULCHED PLANTING BED SHALL HAVE A MINIMUM FIVE-FOOT (5') MULCH RING INSTALLED AROUND THE TRUNK AREA. TREES SHALL BE PLANTED A MINIMUM OF FIVE-FEET (5') FROM BACK OF CURB OR SIDEWALK (TYP).

SEE ENGINEER'S PLAN FOR ALL EXISTING AND PROPOSED EASEMENTS, COVENANTS, R.O.W., BUFFER DIMENSTIONS, AND ALL SITE LAYOUT DIMENSIONING.

PROJECT MULCH SHALL BE PINE BARK NUGGETS AND BE INSTALLED A MINIMUM OF THREE-INCHES (3") THICK AND A MINIMUM OF TWELVE-INCHES (12") FROM ANY PLANTED TREE TRUNK.

SHADE/UNDERSTORY TREES

3

KEY	QTY	BOTANICAL/COMMON NAMES	HT.	SPR.	REMARKS
IL	14	Ilex x attenuata 'Eagleston' Eagleston Holly	8'-10'	3'-4'	Min 2" Cal
LI	7	Lagerstromia indica ' Crepe Myrtle Tree	8'-10'	3'-4'	Min 2" Cal
LL	6	Ligustrum lucidum 'STD' Japanese Privet Tree	8'	3'	Min 2" Cal
MC	9	Myrica cerifera 'STD' Wax Myrtle Tree	8'	3' Min Five (5) Trunks	Min 2" Cal
QV	14	Quercus virginiana Live Oak	10'-12' Shape/Full	3'	Min 2 1/2" Cal
TD	6	Taxodium distichum Bald Cypress	10'-12'	3' Shape/Full	Min 2 1/2" Cal

SHRUBS/GROUNDCOVERS

3

KEY	QTY	BOTANICAL/COMMON NAMES	HT.	SPR.	REMARKS
ARB	52	Schefflera arbicola 'Trinette' Var Dwarf Arbicola	18"	12"	3 Gal Cont 30" O.C.
COR	40	Paspalum quadrifarium Evergreen Paspalum Crown Grass	30"	14"	3 Gal Cont 42" O.C.
CRO	42	Codiaeum variegatum 'Curly Boy Curley leaf Croton	18" Min 3 PPP	10"	3 Gal Cont 24" O.C.
JUN	174	Juniperus parsonii 'Squmatta' Parson's Juniper	6"	6"	1 Gal Cont 30" O.C.
LAN	62	Lantana camera 'Dwarf' Lantana camera Yellow	6"	6"	1 Gal Cont 30" O.C.
RAP	151	Raphiolepis indica Indian Hawthorn	18"	10"	3 Gal Cont 36" O.C.
ROS	39	Rosa Knockout@ RED PP11836 Dwrf Red Rose	16"	10"	3 Gal Cont 30" O.C.
TUB	12	Tulbaghia violacia Society Garlic	6"	6"	1 Gal Cont 18" O.C.
VIB	362	Viburnum odoratissimum Sweet Viburnum	30"	12"	3 Gal Cont 36" O.C.& AS SHOWN

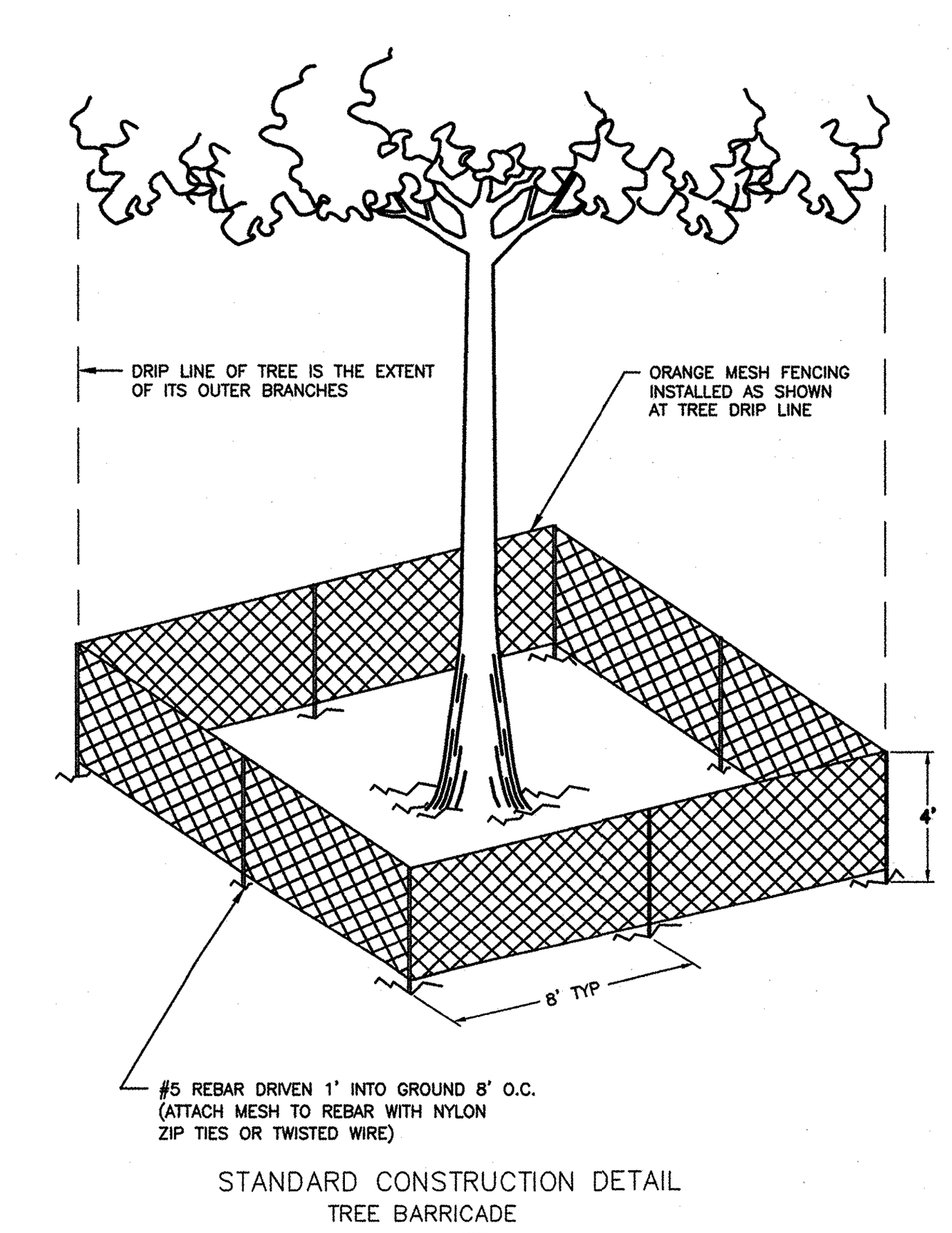

STANDARD CONSTRUCTION DETAIL
TREE BARRICADE
NTS.

NOTE:

THE LOCATION OF ALL REQUIRED ELECTRIC TRANSFORMERS, SIGNAGE, HVAC EQUIPMENT, OR ANY OTHER TYPE OF UNITS WILL NOT CONFLICT WITH ANY PROPOSED LANDSCAPE MATERIAL. ADDITIONAL LANDSCAPE PLANTINGS WILL BE ADDED, IF NECESSARY, TO SCREEN THESE ITEMS.

CONTRACTOR IS TO PROVIDE MINIMUM CLEARANCE OF SIX-FEET (6') TO THE SIDES OF ALL FIRE HYDRANTS. PROVIDE A MINIMUM CLEARANCE OF SEVEN AND ONE-HALF FEET (7 1/2') IN FRONT OF AND TO THE SIDES OF THE FIRE DEPARTMENT CONNECTION.

15 30 60
GRAPHIC SCALE: 1"= 30'

THE STERN DESIGN GROUP, P.A.
LANDSCAPE ARCHITECTS LAND PLANNERS
1685 Promenade Circle, Port Orange, Florida 32129
(386) 788-3788 CELL (386) 290-6411
SternDesignGroup@att.net
JanStern@SternDesignGroup.com

NO.	DATE	APPR.	REVISION
1	10/22/2019	J.S.	REV SITE AND ADD TREE CALC SEPERASTE SHT
2	11/08/2019	J.S.	REV PERIMETER REQUIREMENTS ADD FENCE
	11/26/2019	J.S.	VIB QTY
3	01/07/2020	J.S.	PER HANNAH COMMENTS OF 12/13/19

THE PERFORMANCE GROUP
CIVIL ENGINEERING / PLANNING / DEVELOPMENT
JOSEPH H. HOPKINS, P.E. NO. 48059
LICENSED BUSINESS CERTIFICATION NO. 7175
100 MARINA POINT DR. DAYTONA BEACH, FL 32114
PHONE: (386)239-7166 FAX: (386)239-7120

LANDSCAPING PLAN

DME SPORTS, LLC

NOT RELEASED FOR CONSTRUCTION

JAN B. STERN, ASLA, RLA
FLORIDA REG. NUMBER
NOT VALID WITHOUT ELECTRONIC SEAL
Jan B. Stern
Digitally signed by Jan B Stern
Date: 2020.01.07 17:09:26 -05'00'

SCALE:	1"=30'
DESIGNED:	JS
DRAWN:	JS
DATE:	7/30/19
PROJECT NO.	250
SHEET	L-2 OF 4

COUNTY OF VOLUSIA LOW-VOLUME IRRIGATION COMPLIANCE

PROJECT AREA 160,786.43 S.F. (3.69 Ac)

PROJECT LANDSCAPE AREA 80,628.29 SF

REQUIRED LANDSCAPE AREA FOR LOW-VOLUME IRRIGATION 20,157.23 SF (25%)

LANDSCAPE AREA PROVIDED (BAHIA SOD-EXISTING NATURAL VEGETATION) 24,994.8 SF (31%)

48 HOURS BEFORE YOU DIG "CALL SUNSHINE" 1-800-432-4770

CITY OF DAYTONA BEACH
DEVELOPMENT REVIEW
City of Daytona Beach
APPROVAL OF: 38
DATE: _____ FILE: _____
STAMP OF APPROVAL DEV2019-128

APPROVED
JAN 30 2020
DEVELOPMENT SERVICES
City of Daytona Beach

LEGEND

DESCRIPTION

- W — WATER SOURCE
- NN — FILTER
- ——— SCH 40 MAIN-LINE
- = = = SLEEVE

4" Irrigation Well
To Produce 30gpm@40psi

Backflow Preventer

1.5" SCH 40 PVC LOOP

SCH 40 PVC IRRIGATION SLEEVE WHERE NEEDED
1.5x IRRIGATION LATERAL/MAIN LINE

KEEP ALL MAIN AND LATERAL LINES OUT OF EXISTING TREE DRIP-LINES. HAND EXCAVATE WHEREVER NECESSARY. ALL ROOT ENCOUNTERED WITHIN THE DRIP-LINE OF TREES TO REMAIN SHALL BE TUNNELED UNDER ROOTS.

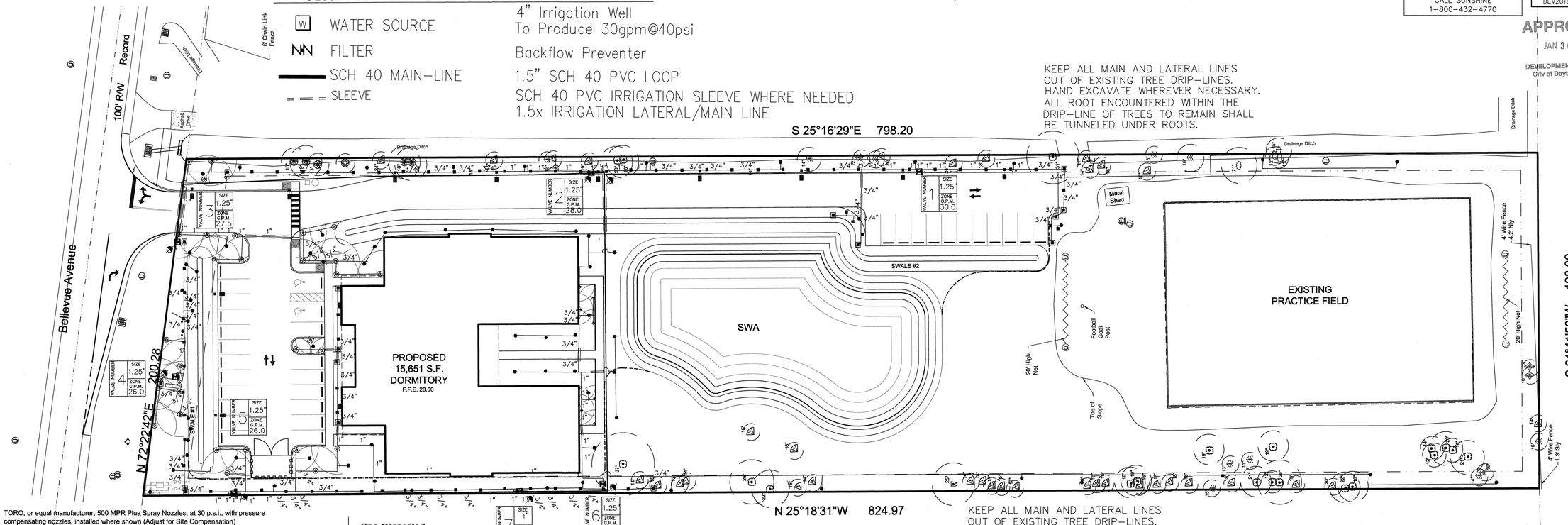

KEEP ALL MAIN AND LATERAL LINES OUT OF EXISTING TREE DRIP-LINES. HAND EXCAVATE WHEREVER NECESSARY. ALL ROOT ENCOUNTERED WITHIN THE DRIP-LINE OF TREES TO REMAIN SHALL BE TUNNELED UNDER ROOTS.

TORO, or equal manufacturer, 500 MPR Plus Spray Nozzles, at 30 p.s.i., with pressure compensating nozzles, installed where shown (Adjust for Site Compensation)

8' Radius Series -	Quarter Head @ 0.25	G.P.M.
	120 Head @ 0.35	G.P.M.
	Half Head @ 0.50	G.P.M.
	240 Head @ 0.75	G.P.M.
	Three-quarter Head @ 0.75	G.P.M.
	Full Head @ 1.00	G.P.M.
10' Radius Series -	Quarter Head @ 0.50	G.P.M.
	120 Head @ 0.50	G.P.M.
	Half Head @ 1.00	G.P.M.
	240 Head @ 1.25	G.P.M.
	Three-quarter Head @ 1.25	G.P.M.
	Full Head @ 1.50	G.P.M.
12' Radius Series -	Quarter Head @ 0.50	G.P.M.
	120 Head @ 0.75	G.P.M.
	Half Head @ 1.25	G.P.M.
	240 Head @ 1.75	G.P.M.
	Three-quarter Head @ 1.75	G.P.M.
	Full Head @ 2.50	G.P.M.
15' Radius Series -	Quarter Head @ 1.00	G.P.M.
	120 Head @ 1.25	G.P.M.
	Half Head @ 1.50	G.P.M.
	240 Head @ 2.25	G.P.M.
	Three-quarter Head @ 3.00	G.P.M.
	Full Head @ 4.00	G.P.M.
End Strip Series, 4' x 15' @ 0.50		G.P.M.
Side Strip Series, 2' x 6' @ 0.25		G.P.M.
Side Strip Series, 4' x 30' @ 1.50		G.P.M.
Flood Bubbler @ 0.50		G.P.M.

"Rainbird", or equal manufacturer, plastic solenoid valves, EP Series, sized as shown on Landscape Irrigation Plans, with flow control and bleed screw installed in a "meter" plastic valve box (green cover for potable water; purple cover for non-potable water), square 8"x12" top installed in ground. Keep all valves a minimum of four-feet (4') from all walkways, driveways, etc. QTY=7

"Rainbird", or equal manufacturer, plastic solenoid valve, EP Series, sized to fit main line as shown with a 24v. Solenoid for master installed at meter (IF METER IS USED) QTY=0

"Rainbird", or equal manufacturer, Electro-Mechanical Station Time Clock, wall mounted inside appropriate building, or where shown on Landscape Irrigation Plans,or as per Owner with 117v./24v. With LPF-K primary and valve lightning surge protection respectively controller master circuit connected to 110v. Master valve solenoid. QTY= One = (1) Eight-Zone (8)

"Rainbird", or equal manufacturer, PVB Series Dual Check Valve and Backflow Preventer, sized as required, mounted above ground as per local City and/or County Codes. QTY= 1

"Hunter", or equal manufacturer, RAIN-CLIK (Rain Shut-Off Device) installed as per manufacturer's instructions where shown on Landscape Irrigation Plans. QTY= 1

- Pipe Connected
- Pipe NOT Connected
- Pipe in Sleeve
- Sleeve Only
- Shows connection point of solenoid valve lateral to project main-line

NOTES

Irrigation Contractor shall be responsible for all applicable fees and permits.

All Pipe and Wire under paving shall be placed in Schedule 40 P.V.C. Sleeves for the full pavement coverage length and shall be at least 24" below grade.

Mainlines shall be buried to provide a minimum cover of 18", while all Lateral lines shall have a minimum of 12".

The Contractor should take care to reroute piping as necessary to avoid plant or tree roots.

All Sprinklers shall be site adjusted to prevent water overthrow onto building surfaces and walkways.

All Piping downstream of Solenoid Valve to be PR-160 P.V.C.

All Control Wiring to be 14/1 U.F. direct burial.

Install a Hunter RainClik, or equal, rain sensor device. Verify location with Owners Representative.

Shrub body sprinklers may be substituted for Hi-Pops against building(s) at owners discretion.

No irrigation heads may be installed closer than twelve-inches (12") to any building.

All pop-up spray heads located in parking lot areas shall be twelve-inches (12") in height.

Contractor is responsible to provide all necessary accessories to provide adequate water volume for this system.

A HIGH VOLUME AREA IS ANY ZONE USING ROTARY HEADS OR REQUIRING 1" OF WATER PER WEEK. THE RUN TIME ON THESE AREAS SHALL BE SET TO NOT APPLY MORE THAN 1" OF WATER PER WEEK. ALL ST. AUGUSTINE SOD ZONES SHALL BE CONSIDERED HIGH VOLUME IRRIGATION.

A MEDIUM VOLUME AREA IS ANY ZONE OF SPRAY HEADS. THE RUN TIME ON THESE AREAS SHALL BE SET TO APPLY 0.5" OF WATER PER WEEK. ALL SHRUB AREAS SHALL BE CONSIDERED MEDIUM VOLUM IRRIGATION.

A LOW VOLUME AREA IS ANY ZONE OF BUBBLER OR DRIP SPRAY HEADS. THE RUN TIME ON THESE AREAS SHALL BE SET TO APPLY 0.25" OF WATER PER WEEK. ALL DRIP OR TREE BUBBLER AREAS SHALL BE CONSIDERED LOW VOLUM IRRIGATION.

ALL HEADS SHALL HAVE CHECK VALVES AND BE PRESSURE COMPENSATING.

A MAINTENANCE CHECKLIST SHALL BE PROVIDED TO THE OWNER BY THE IRRIGATION CONTRACTOR IT SHALL HAVE A MAINTENANCE SCHEDULE, PROPER IRRIGATION SETTINGS ACCORDING TO SEASON, RECOMMENDATIONS FOR CHECKING THE RAIN SENSOR DEVICE, FILTER CLEANING RECOMMENDATIONS AND INFORMATION ON CURRENT WATER RESTRICTIONS.

THE IRRIGATION CONTRACTOR SHALL SUBMIT A COMPLETED AND ENCLOSED CHECKLIST ON A FORM PROVIDED BY THE PERMITTING AUTHORITY. IT SHALL BE ACCOMPANIED BY AN AS-BUILT SKETCH OF THE IRRIGATION SYSTEM. THIS SHALL BE SUPPLIED WITHIN 30 DAYS OF THE COMPLETION OF THE IRRIGATION SYSTEM OR WITH THE REQUEST FOR FINAL INSPECTION.

WATERING SCHEDULE -CLOCK A

PROGRAM	ZONE	G.P.M.	MINUTES	DAYS/WEEK	WATER USAGE
A	1	30.00	25	2	M
A	2	28.00	25	2	M
A	3	27.50	25	2	M
A	4	26.00	25	2	M
A	5	26.00	25	2	M
A	6	27.00	25	2	M
A	7	19.00	25	2	M

IRRIGATION RUN TIMES WILL VARY MONTHLY DUE TO TEMPERATURE AND RAINFALL. CHECK WEEKLY FOR BREAKS IN PIPES, CLOGGED HEADS, AND DRY/WET SOIL CONDITIONS.

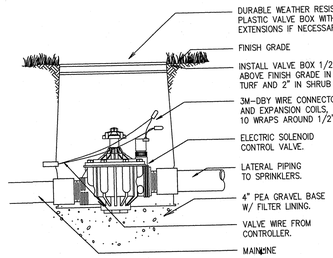

TYPICAL SOLENOID VALVE
NOT TO SCALE

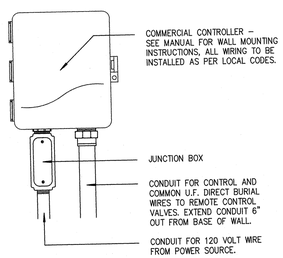

TYPICAL WALL MOUNT CONTROLLER
NOT TO SCALE

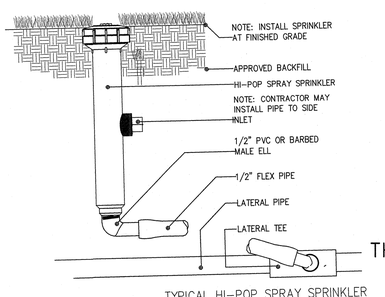

TYPICAL HI-POP SPRAY SPRINKLER
NOT TO SCALE

GRAPHIC SCALE: 1"= 30'

THE STERN DESIGN GROUP, P.A.
LANDSCAPE ARCHITECTS LAND PLANNERS
1685 Promenade Circle, Port Orange, Florida 32129
(386) 788-3788 CELL (386) 290-6411
SternDesignGroup@att.net
JanStern@SternDesignGroup.com

NO.	DATE	APPR.	REVISION
1	10/24/2019	JBS	REV. SITE PLAN AND PER COMMENTS

THE PERFORMANCE GROUP
CIVIL ENGINEERING / PLANNING / DEVELOPMENT
JOSEPH H. HOPKINS, P.E. NO. 48659
LICENSED BUSINESS NO. 27175
100 MARINA POINT DR. DAYTONA BEACH, FL 32114
PHONE: (386)239-7166 FAX: (386)239-7120

IRRIGATION PLAN

DME SPORTS, LLC

NOT RELEASED FOR CONSTRUCTION

JAN B. STERN, ASLA, PLA
FLORIDA REGISTERED
LANDSCAPE ARCHITECT
No. 0001175
STATE OF FLORIDA
Digitally signed by Jan B. Stern
Date: 2019.10.24 13:31:29
NOT VALID WITHOUT ELECTRONIC SEAL

SCALE: -04'00'
DESIGNED: JS
DRAWN: JS
DATE: 7/30/19
PROJECT NO. 250

SHEET L-3 OF 4

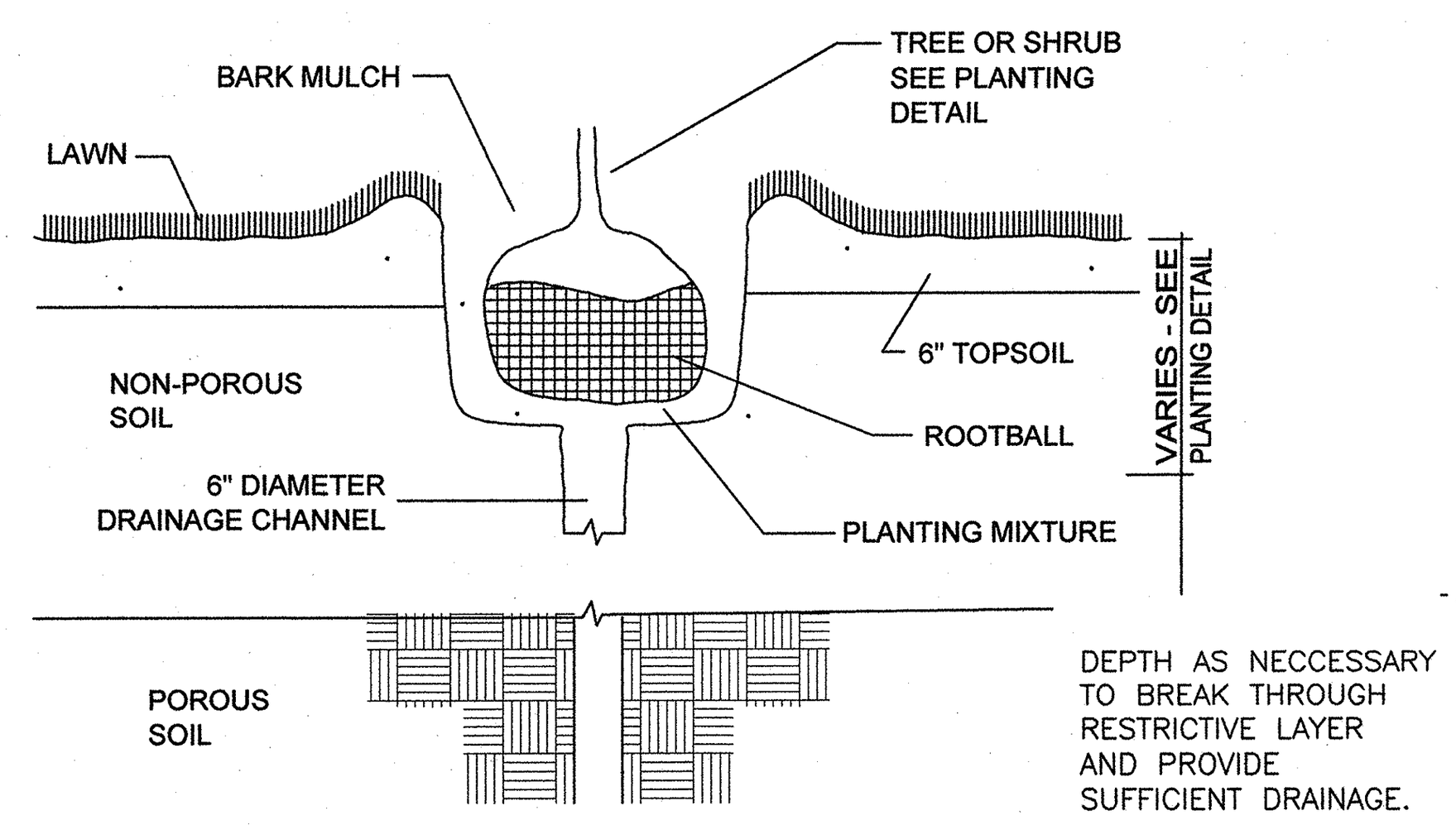

DRAINAGE TESTING/DRAINAGE CHANNEL REQUIREMENTS

PRIOR TO PLANTING PITS SELECTED FOR TESTING SHALL BE TESTED IN THE FOLLOWING MANNER:

A. DIG EACH PLANTING PIT TO THE MINIMUM SPECIFIED SIZE.

B. FILL PLANTING PIT TWELVE INCHES (12") OF WATER. IF THE WATER LEVEL DROPS FOUR INCHES (4") OR MORE WITHIN FOUR (4) HOURS, THE DRAINAGE IS SUFFICIENT AND DRAINAGE CHANNEL IS NOT REQUIRED. IF HOWEVER, THE WATER LEVEL DROPS LESS THAN FOUR INCHES (4") WITHIN THE FOUR (4) HOUR PERIOD, A DRAINAGE CHANNEL IS REQUIRED.

C. WHERE REQUIRED, THE DRAINAGE CHANNEL MUST EXTEND DOWN THROUGH THE NON-POROUS SOIL AND INTO POROUS SOIL. (SEE DETAIL)

D. ALL MATERIAL REMOVED FROM THE DRAINAGE CHANNEL SHALL BE DISCARDED.

E. WHEN BACKFILLING PLANTING PITS WITH PLANTING MIXTURE, CARE MUST BE TAKEN TO KEEP THE CONSISTENCY OF THE SOIL MIX THE SAME THROUGHOUT THE PLANTING PIT AND DRAINAGE CHANNEL.

DRAINAGE CHANNEL DETAIL

NOT TO SCALE

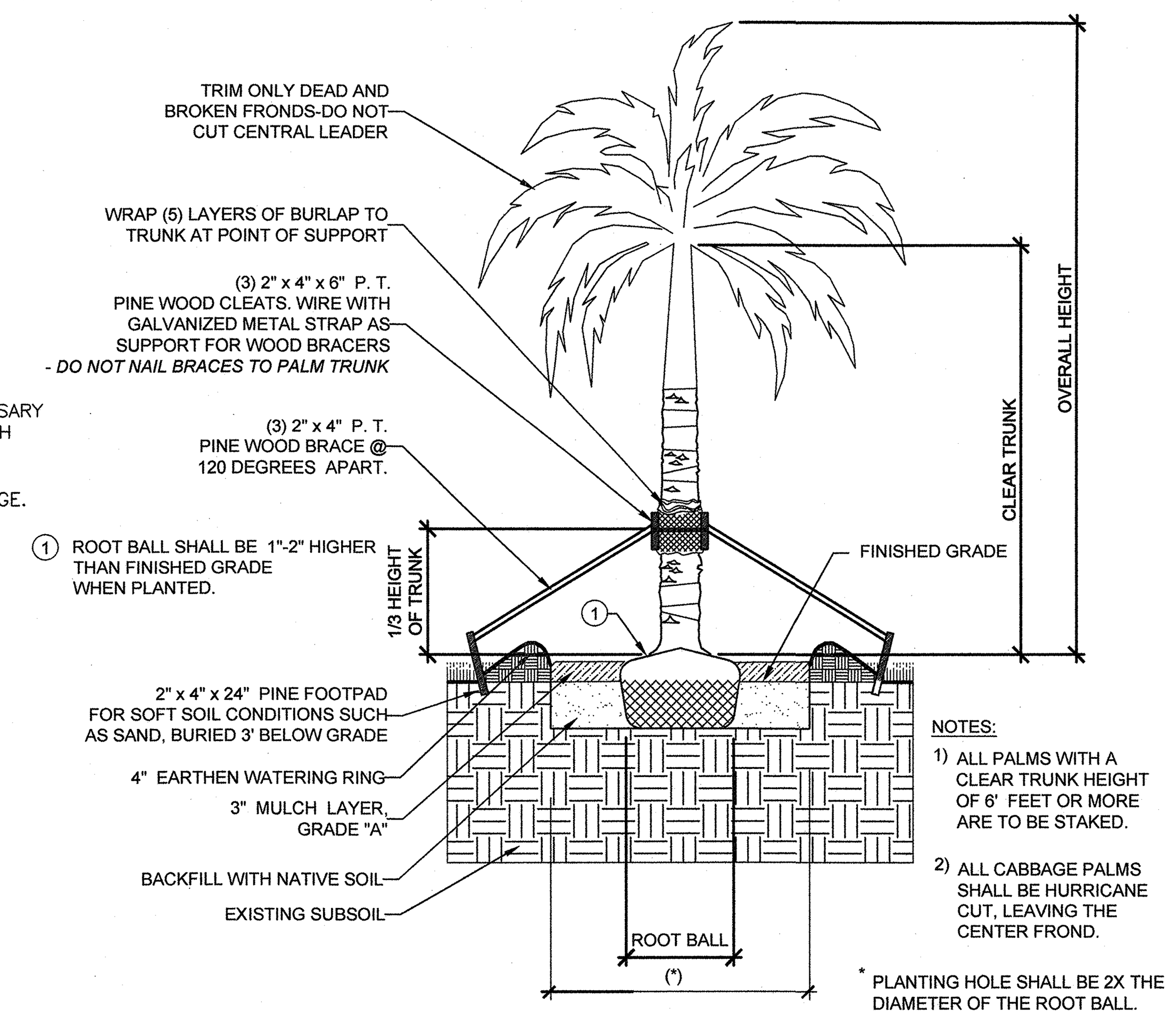

NOTES:
1) ALL PALMS WITH A CLEAR TRUNK HEIGHT OF 6' FEET OR MORE ARE TO BE STAKED.
2) ALL CABBAGE PALMS SHALL BE HURRICANE CUT, LEAVING THE CENTER FROND.

* PLANTING HOLE SHALL BE 2X THE DIAMETER OF THE ROOT BALL.

STANDARD CONSTRUCTION DETAIL
STRAIGHT TRUNK PALM PLANTING DETAIL

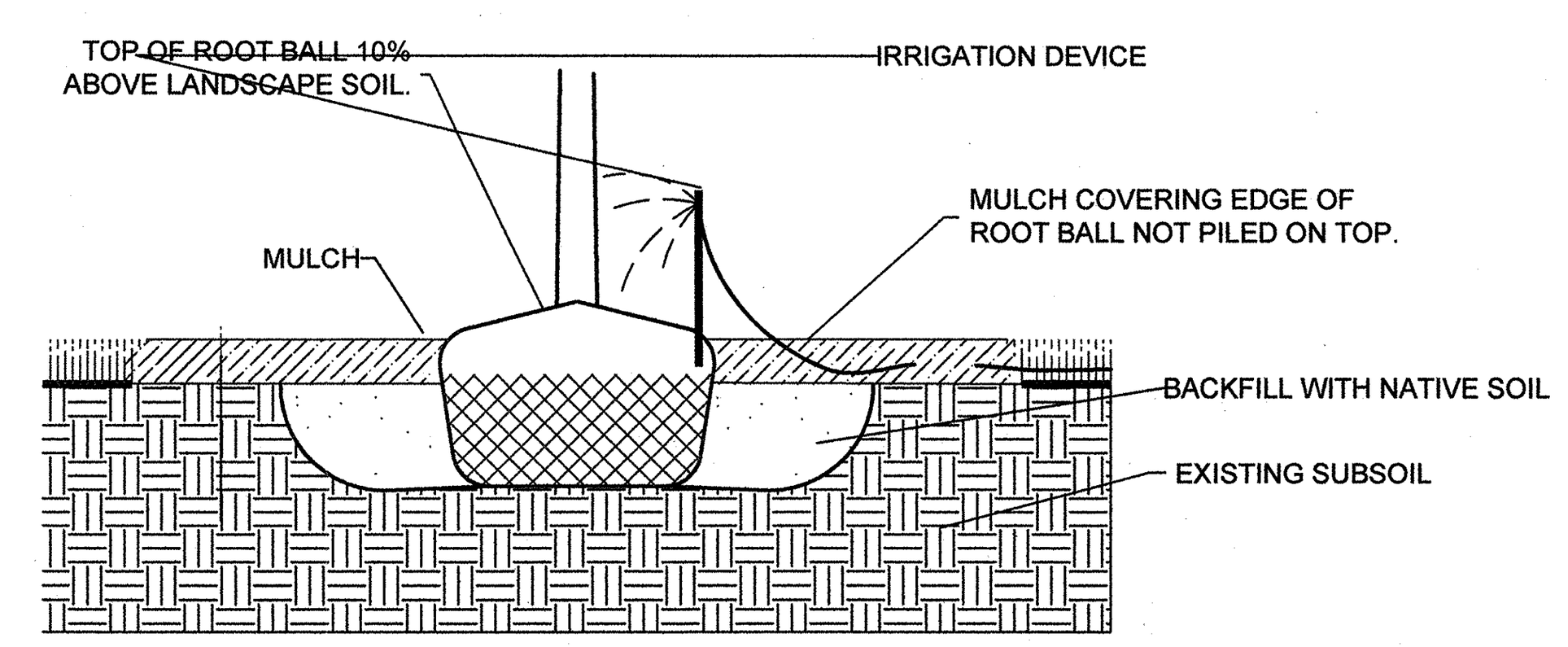

NEVER PLACE ANY SOIL OVER THE ROOT BALL. THE ROOT BALL SHOULD BE POSITIONED IN THE HOLE SHALLOW ENOUGH SO THE FINISHED GRADE OF THE BACKFILL SOIL DOES NOT REACH THE TOP. IN OTHER WORDS, LEAVE THE TOP FEW INCHES OF THE ROOT BALL SIDES EXPOSED TO THE AIR. MULCH WILL COVER THE REMAINING COUPLE INCHES. THE TOP OF THE ROOT BALL SHOULD BE SEVERAL INCHES HIGHER THAN THE SURROUNDING LANDSCAPE SOIL. BE SURE THAT WHEN YOU ARE FINISHED PLANTING, THERE IS NO SOIL OVER THE ROOT BALL. SOIL (AS WELL AS THICK MULCH LAYERS MORE THAN 3 INCHES DEEP) OVER THE ROOT BALL CAN PREVENT WATER AND AIR FROM ENTERING THE ROOT BALL. YOU SHOULD BE ABLE TO SEE THE TOP-MOST ROOT ORIGINATING FROM THE TRUNK AT THE SOIL SURFACE OR WITHIN THE TOP INCH OF SOIL IN THE ROOT BALL. THE TRUNK FLARE SHOULD BE VISIBLE.

MULCH SHOULD COVER ONLY THE EDGE OF THE ROOT BALL, SINCE THICK LAYERS OVER THE ROOT BALL CAN KEEP THE TRUNK TOO MOIST OR TOO DRY AND CAN CAUSE OTHER PROBLEMS. LOCATE THE IRRIGATION DEVICE SO IT DELIVERS WATER DIRECTLY TO THE ROOT BALL. THERE IS USUALLY NO NEED TO WATER AREAS OUTSIDE THE ROOT BALL. NO AMENDMENTS OF ANY KIND ARE NECESSARY IN THE BACKFILL SOIL, BECAUSE EXTENSIVE RESEARCH CLEARLY SHOWS THAT THEY TYPICALLY DO NOT NOT INCREASE THE SURVIVAL, NOR GROWTH AFTER PLANTING. NO SOIL BERM IS NEEDED IF TREES WILL BE IRRIGATED WITH A LOW-VOLUME DEVICE. PLACE THE BERM AT THE EDGE OF THE ROOT BALL IF THE ROOT BALL IS FINER TEXTURE THAN THE BACKFILL SOIL. THIS WILL HELP INSURE THAT WATER PERCOLATES INTO THE ROOT BALL.

STANDARD CONSTRUCTION DETAIL
PLANT LIKE THIS DETAIL
NTS.

PLANTING NOTES

1. ALL MATERIALS ARE TO BE FLORIDA #1 OR BETTER, INSTALLED ACCORDING TO THE HIGHEST NURSERY STANDARDS.
2. MULCH IS TO BE 100% SHREDDED CYPRESS, GRADE "A", INSTALLED A MINIMUM OF 2" THICK IN ALL PLANTING AREAS. MULCHED PLANTING BEDS SHALL BE A MINIMUM OF 10" WIDE AND SHALL BE CONTINUOUS WHERE PLANTINGS ARE PROPOSED.
3. ALL AREAS MARKED SOD ON THE PLANS, SHALL BE SODDED WITH 95% WEED-FREE ST. AUGUSTINE "FLORATAM" SOLID SOD. SOD SHALL BE INSTALLED WITH TIGHT JOINTS, BOLLED, AND FERTILIZED. NUTRIENTS SHALL BE ADDED TO THE SOIL AS PER SOIL TESTING RESULTS.
4. BAHIA SOLID SOD SHALL BE USED ON ALL AREAS SO MARKED AS IN SWALES, RIGHT-OF-WAYS, DISTURBED AREAS, OR OTHER AREAS SUBJECT TO EROSION.
5. GRASS SEEDED AREAS SHALL MEET FLORIDA STATE DEPARTMENT OF TRANSPORTATION STANDARDS.
6. LANDSCAPE CONTRACTOR IS TO LOCATE AND VERIFY ALL UNDERGROUND UTILITIES PRIOR TO BEGINNING THE WORK. THE LANDSCAPE ARCHITECT SHALL NOT BE RESPONSIBLE FOR ANY DAMAGE TO UTILITY OR IRRIGATION
7. LANDSCAPE CONTRACTOR IS TO VERIFY ALL DRAWINGS AND CHECK FOR DISCREPANCIES AND BRING THEM TO THE ATTENTION OF THE LANDSCAPE ARCHITECT PRIOR TO COMMENCING WITH THE WORK.
8. THE PLANT MATERIALS SCHEDULE IS PROVIDED FOR THE CONVENIENCE OF THE LANDSCAPE CONTRACTOR. SHOULD THERE BE ANY DISCREPANCY, PLANTING PLANS SHALL TAKE PRECEDENCE OVER THE PLANT LIST.
10. NO SUBSTITUTIONS WILL BE MADE AT THE TIME OF BIDDING OR CHANGES OF ANY KIND, SO AS TO PROVIDE FOR FAIR COMPARISONS. NO FURTHER CHANGES ARE TO ME BADE WITHOUT PRIOR CONSENT OF THE LANDSCAPE ARCHITECT.
11. 100% AUTOMATIC IRRIGATION SYSTEM IS TO BE INSTALLED ACCORDING TO THE IRRIGATION PLAN AND SPECIFICATIONS WITH A MINIMUM 50% OVERLAP. ALL IRRIGATION AND ELECTRICAL LINES ARE TO BE LOCATED AT THE PERIMETER OF ALL PLANTERS AND/OR PLANTING AREAS.
12. ALL BUILDING MATERIALS AND LABOR ARE TO CONFORM TO THE SOUTHERN BUILDING CODE AND ALSO TO ALL LOCAL CODES THAT HAVE JURISDICTION.
13. ALL PERMIT AND VARIANCE APPLICATION ARE TO BE MADE BY THE CONTRACTOR.
14. PRIOR TO THE INSTALLATION OF THE IRRIGATION SYSTEM, A WATER TEST IS TO BE CONDUCTED ON THE WATER SOURCE TO DETERMINE PH.. IT IS THE RESPONSIBILITY OF THE LANDSCAPE CONTRACTOR TO NOTIFY THE LANDSCAPE ARCHITECT IF THE RESULTING WATER PH. REQUIRES AMENDING PLANT SELECTIONS OR MODIFYING WATER SOURCE.
15. PRIOR TO CONSTRUCTION OF PLANTING BEDS, ALL AREAS ARE TO HAVE SOIL TESTS CONDUCTED TO DETERMINE PH. AND FERTILITY. IT IS THE RESPONSIBILITY OF THE LANDSCAPE CONTRACTOR TO AMEND THE SOIL TO MEET ADEQUATE FERTILITY AND PH. FOR CORRESPONDING PLANT MATERIALS.
16. PRIOR TO THE LAND CLEARING STAGE, THE CONTRATOR SHALL CLEARLY MARK ANY TREE, TREE GROUPS OR SHRUBS TO BE MAINTAINED IN THE PROXIMITY OF ANY AREA WHERE LAND CLEARING EQUIPMENT IS TO BE OPERATED. THE MARKINGS SHALL REMAIN IN PLACE DURING CONSTRUCTION. SAID EQUIPMENT SHALL BE OPERATED IN A MANNER AS OT NOT INJURE OR DESTROY THREE (3) FEET IN HEIGHT SHALL BE FORMED A MINIMUM RADIUS OF SIX (6) FEET FROM THE BASE OF THE TREES OR SHRUBS, AND THE DEVELOPER SHALL NOT CAUSE OR ALLOW THE CLEARING OF EQUIPMENT OR MATERIAL WITHIN THE DRIP LINE OF ANY TREE OR GROUPS OF TREES TO BE MAINTAINED. NEITHER SHALL THE DEVELOPER CAUSE OR ALLOW THE DISPOSAL OF WASTE MATERIAL, SUCH AS PAINT, OIL SOLVENTS, ASPHALT, CONCRETE, MORTAR OR OTHER MATERIALS HARMFUL TO THE LIFE OF A TREE WITHIN THE DRIP LINE OF ANY TREE OR GROUPS OF TREES. NO ATTACHMENT WIRES (OTHER THAN PROTECTION GUY WIRES), SIGNS, OR PERMITS MAY BE FASTENED TO A TREE.
17. REMOVE ALL TAGS FROM INSTALLED PLANT MATERIALS.
18. PLACE TERRA SORB UNDER THE ROOT BALL OF ALL PLANT MATERIALS.
19. ALL TREES ARE TO BE GUYED WITHING "DUCKBILL" ANCHORING SYSTEMS OR AN APPROVED EQUAL.
20. ALL TREE CALIPERS ARE TO BE MEASURED ACCORDING TO LOCAL CODES AND ORDINANCES.
21. ALL QUESTIONS CONCERNING THE PLAN AND/OR SPECIFICATIONS ARE TO BE DIRECTED TO THE LANDSCAPE ARCHITECT. (904-677-4486)
22. ALL PLANT MATERIAL TO BE GUARANTEED FOR A PERIOD OF NOT LESS THAN ONE (1) YEAR FROM THE TIME OF FINAL ACCEPTANCE. ALL REPLACEMENTS TO BE MADE WITHING TWO (2) WEEKS OF CONTRACTOR NOTIFICATION.

CITY OF DAYTONA BEACH
DEVELOPMENT REVIEW
City of Daytona Beach
APPROVAL OF: SP
DATE: ______ FILE: ______
STAMP OF APPROVAL

APPROVED
JAN 30 2020
DEVELOPMENT SERVICES
City of Daytona Beach

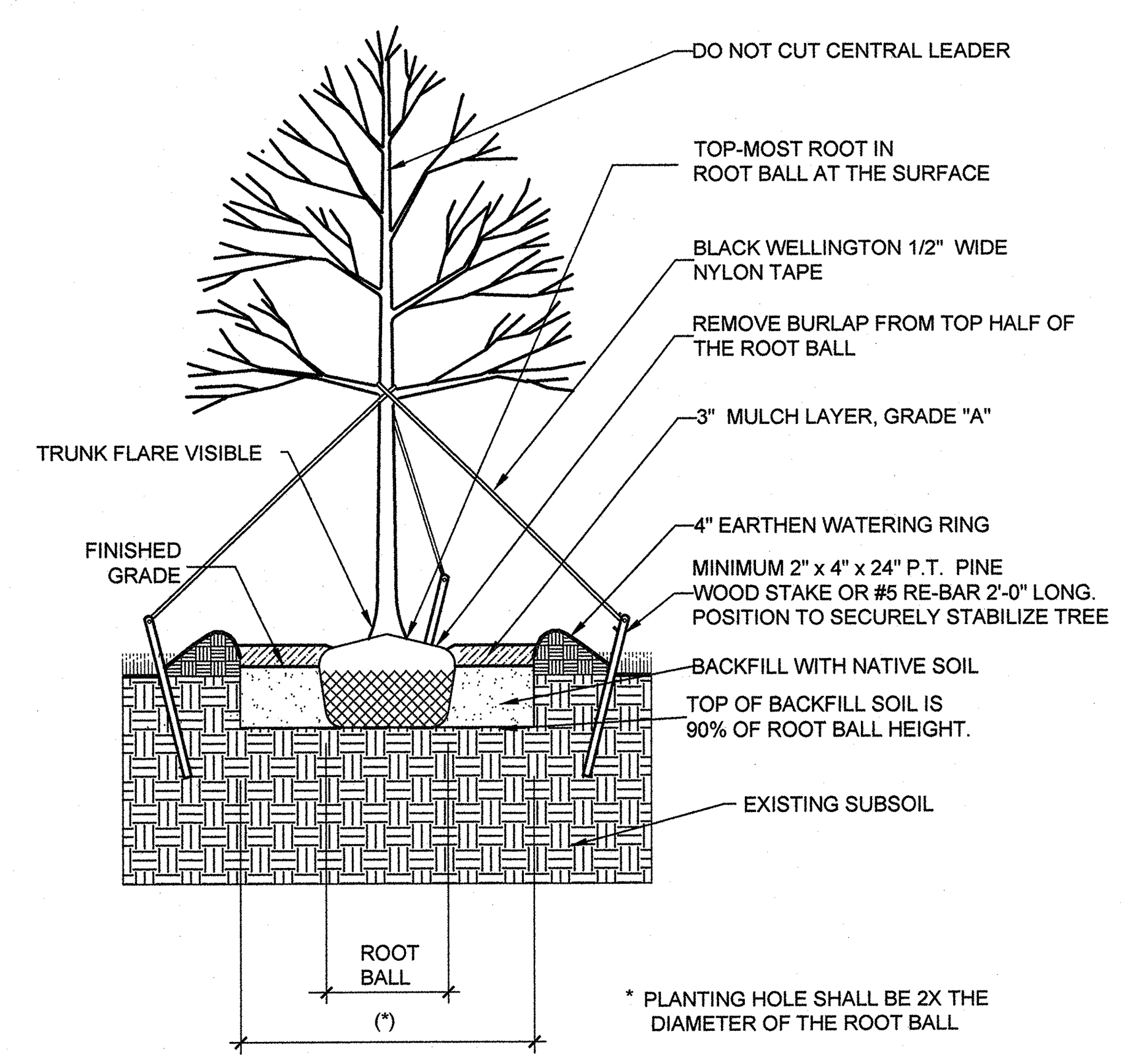

* PLANTING HOLE SHALL BE 2X THE DIAMETER OF THE ROOT BALL

STANDARD CONSTRUCTION DETAIL
LARGE TREE PLANTING DETAILS
NTS.

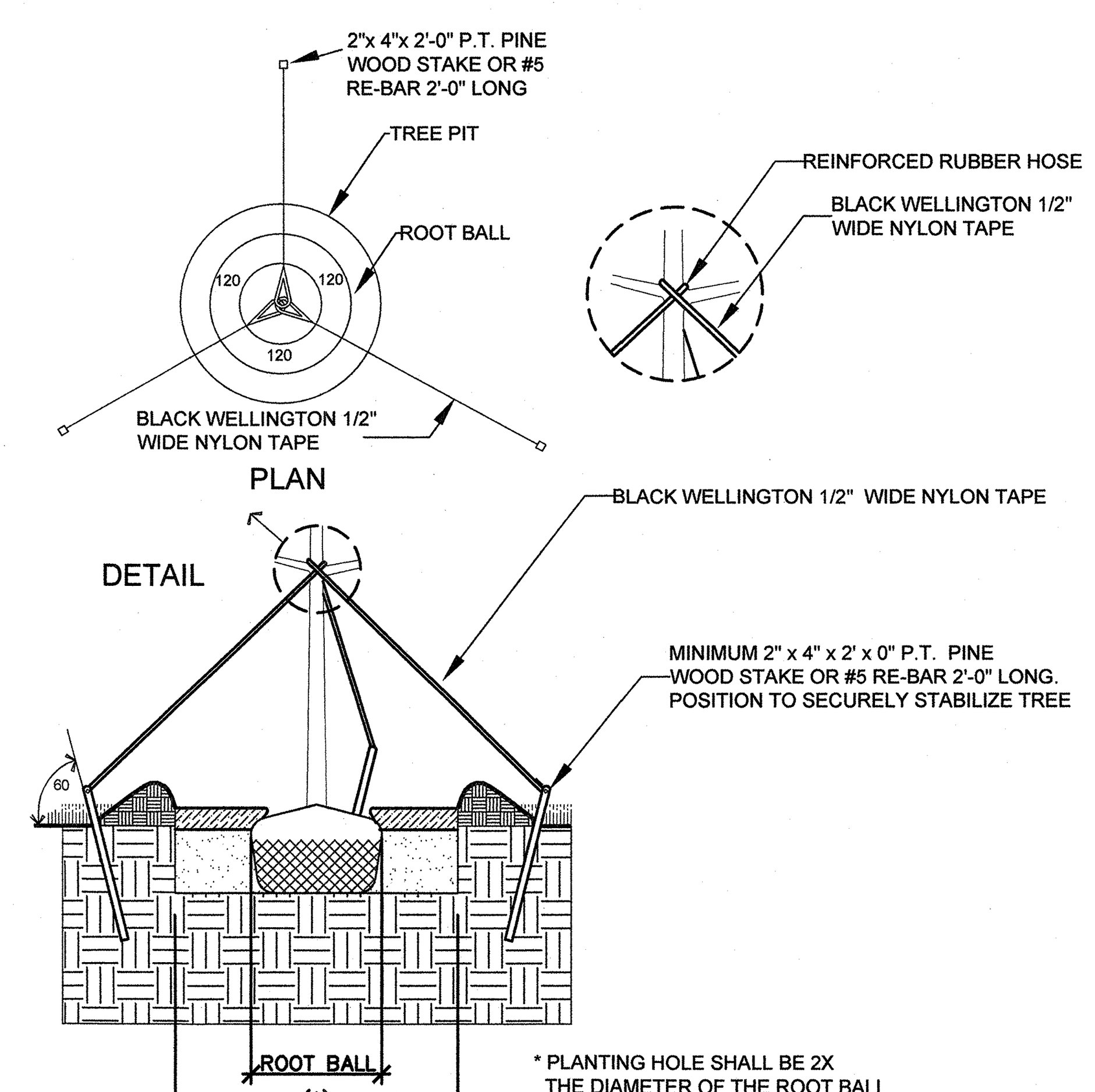

* PLANTING HOLE SHALL BE 2X THE DIAMETER OF THE ROOT BALL

STANDARD CONSTRUCTION DETAIL
TYPICAL TREE GUYING DETAIL
NTS.

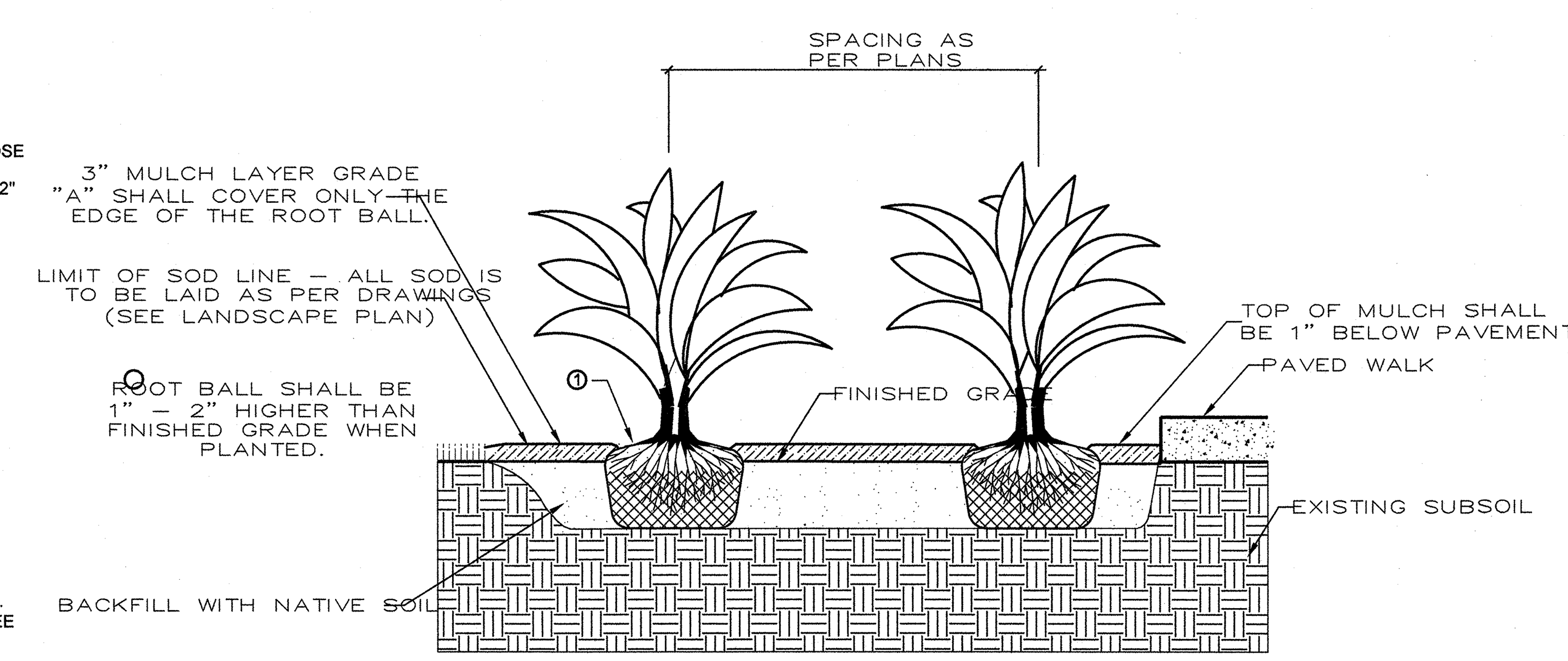

STANDARD CONSTRUCTION DETAIL
TYPICAL GROUND COVER DETAIL
NTS

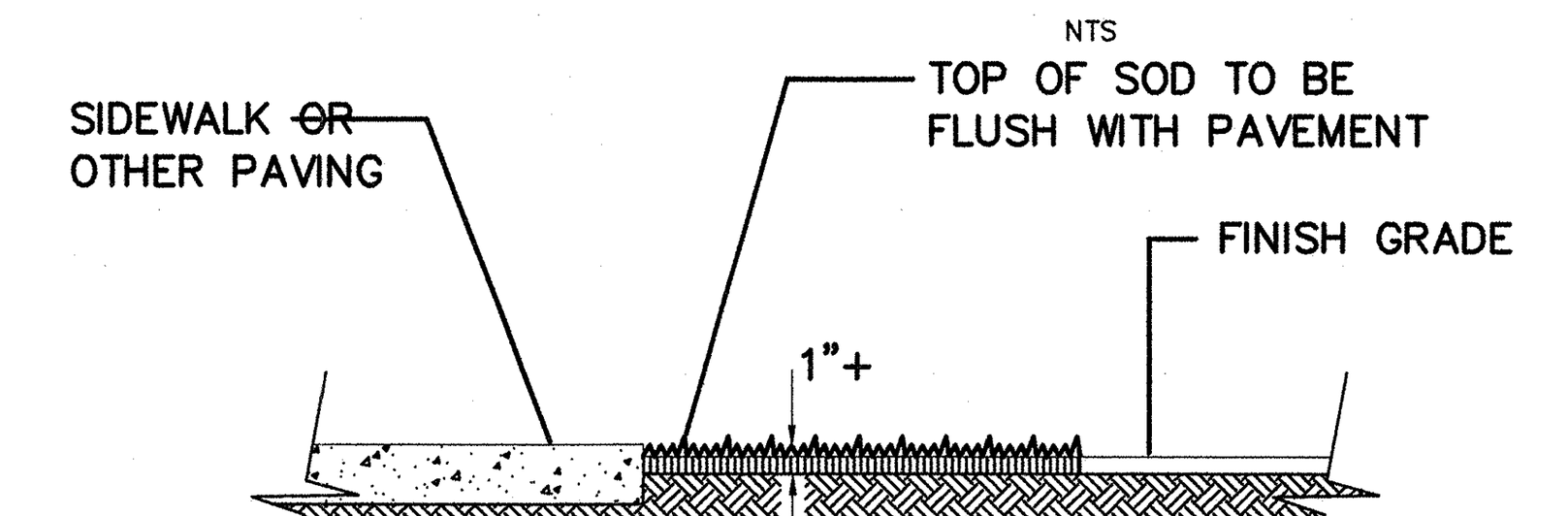

SOD PLACEMENT ADJ. TO PAVEMENT
Scale: N.T.S.

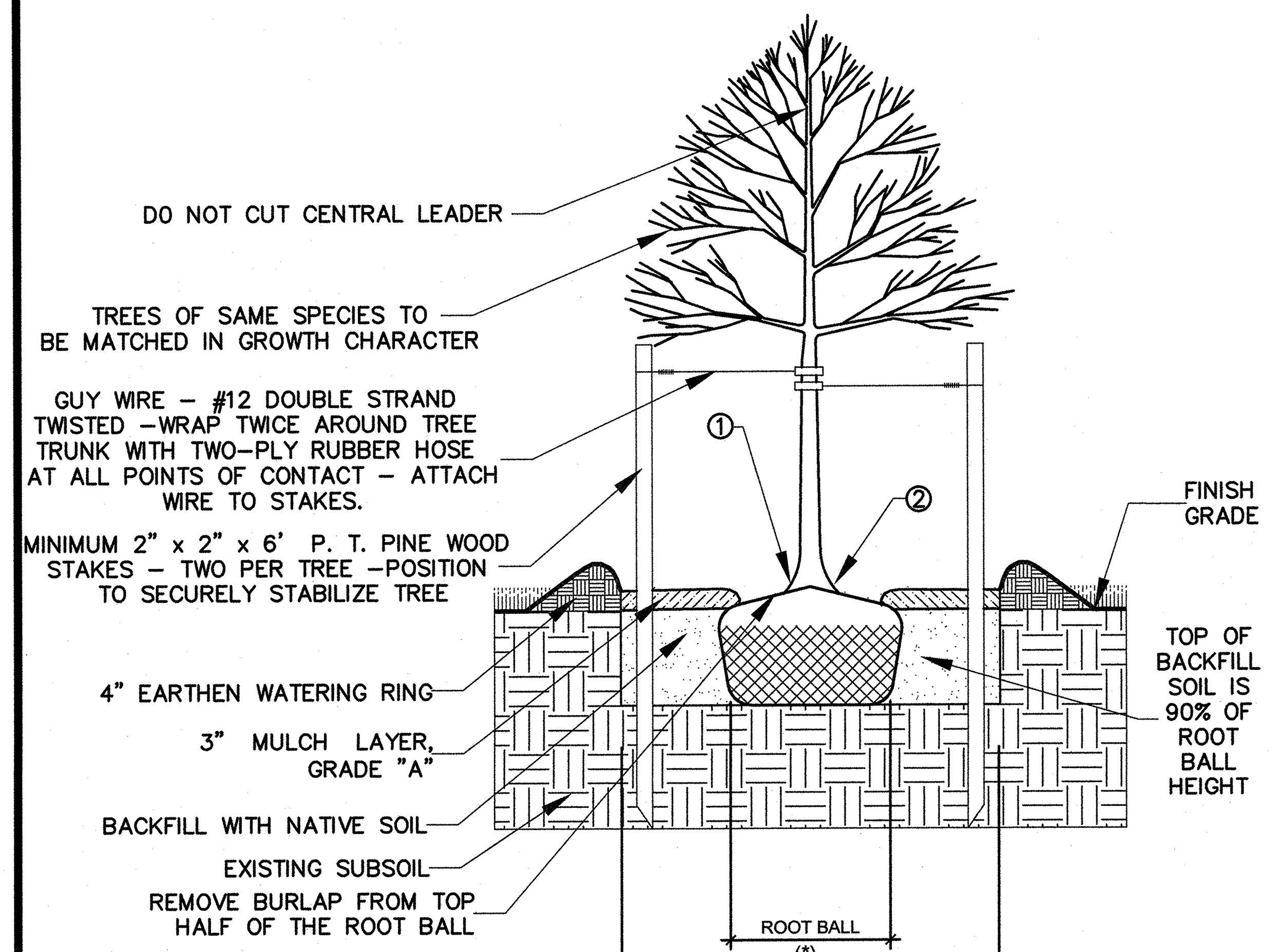

(1) TRUNK FLARE VISIBLE
(2) TOP-MOST ROOT IN ROOT BALL AT THE SURFACE

* PLANTING HOLE SHALL BE 2X THE DIAMETER OF THE ROOT BALL.

STANDARD CONSTRUCTION DETAIL
SMALL TREE PLANTING DETAIL
NTS.

NOTE: IN MOST CASES, TRIANGULAR SPACING IS PREFERRED. USE SQUARE SPACING ONLY IN SMALL RECTILINEAR AREAS.

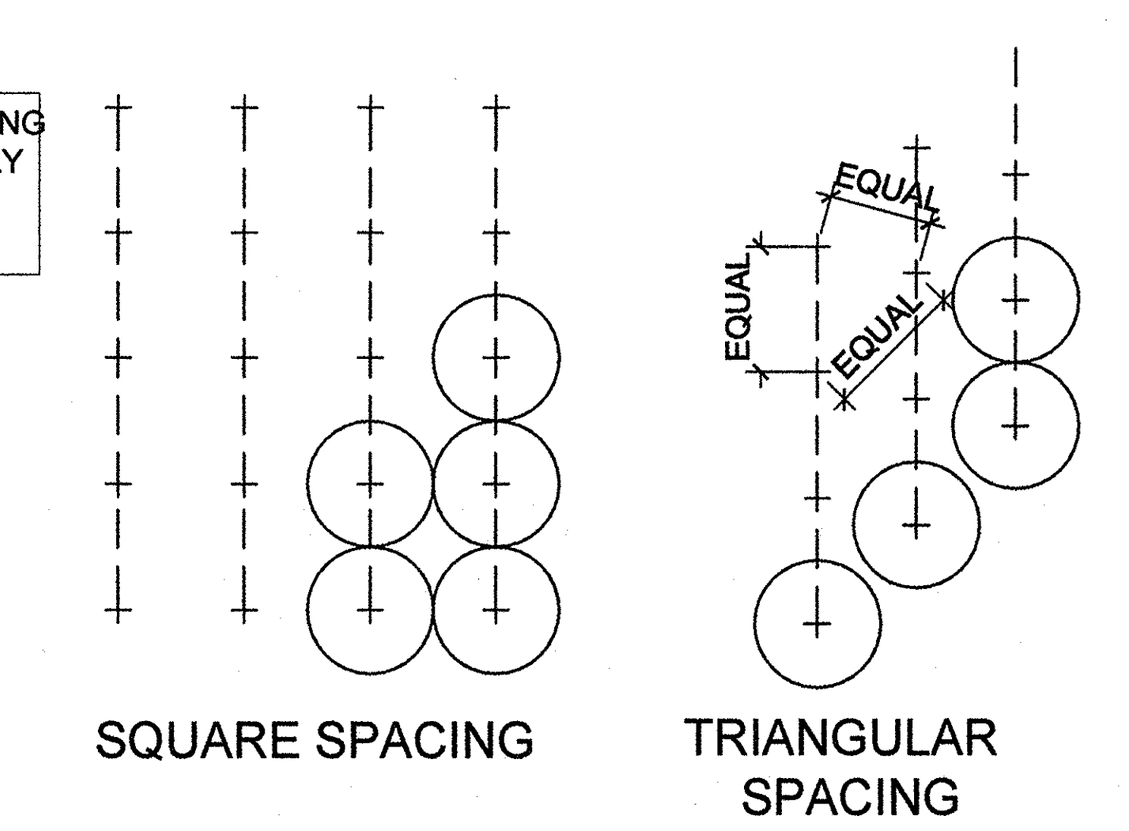

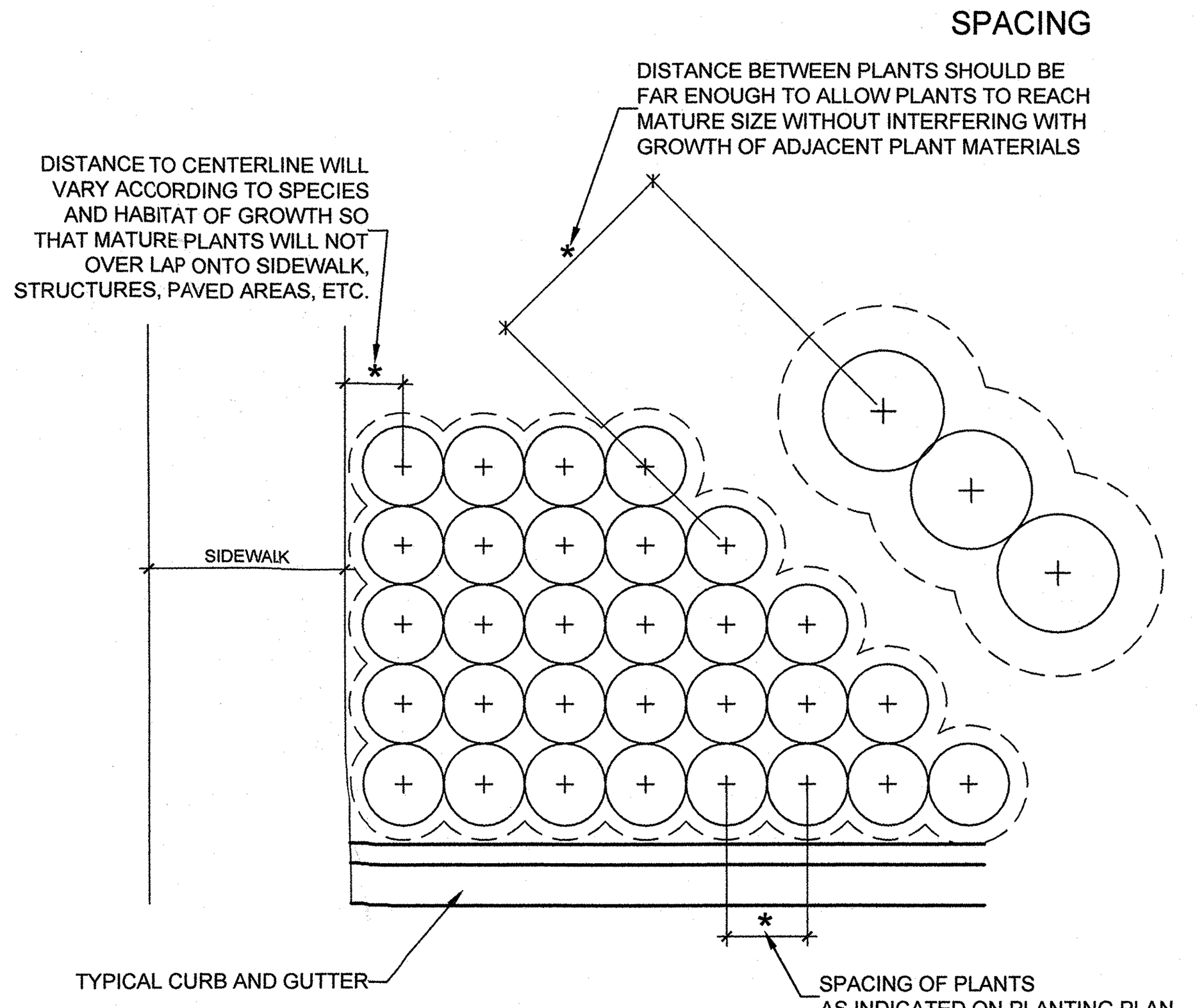

STANDARD CONSTRUCTION DETAIL
TYPICAL CONTAINER SPACING
NTS.

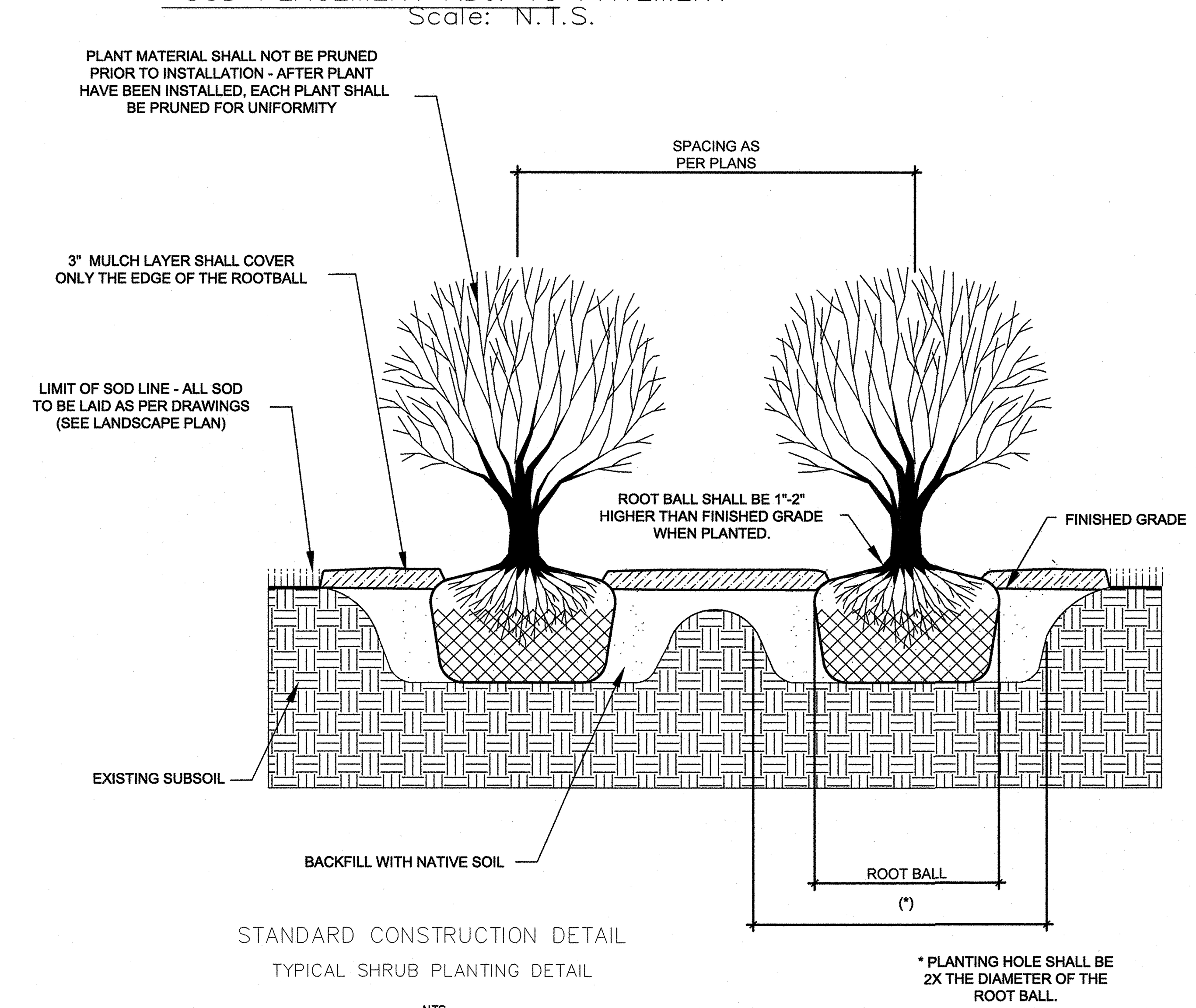

* PLANTING HOLE SHALL BE 2X THE DIAMETER OF THE ROOT BALL.

STANDARD CONSTRUCTION DETAIL
TYPICAL SHRUB PLANTING DETAIL
NTS

THE STERN DESIGN GROUP, P.A.
LANDSCAPE ARCHITECTS LAND PLANNERS
1685 Promenade Circle, Port Orange, Florida 32129
(386) 788-3788 CELL (386) 290-6411
SternDesignGroup@att.net
JanStern@SternDesignGroup.com

REVISION	NO.	DATE	APPR.

THE PERFORMANCE GROUP
CIVIL ENGINEERING / PLANNING / DEVELOPMENT
JOSEPH H. HOPKINS, P.E. NO. 48059
LICENSED BUSINESS CERTIFICATION NO. 7175
100 MARINA POINT DR. DAYTONA BEACH, FL 32114
PHONE: (386)239-7166 FAX: (386)239-7120

LANDSCAPING PLANTING DETAILS

DME SPORTS, LLC

NOT RELEASED FOR CONSTRUCTION

JAN B. STERN ASLA RLA FLORIDA REG. NUMBER
NOT VALID WITHOUT ELECTRONIC SEAL

Jan B Stern Digitally signed by Jan B Stern Date: 2019.10.23 10:50:28 -04'00'

SCALE:	1"=30'
DESIGNED:	JS
DRAWN:	JS
DATE:	7/30/19
PROJECT NO.	250
SHEET	L-4 OF 4

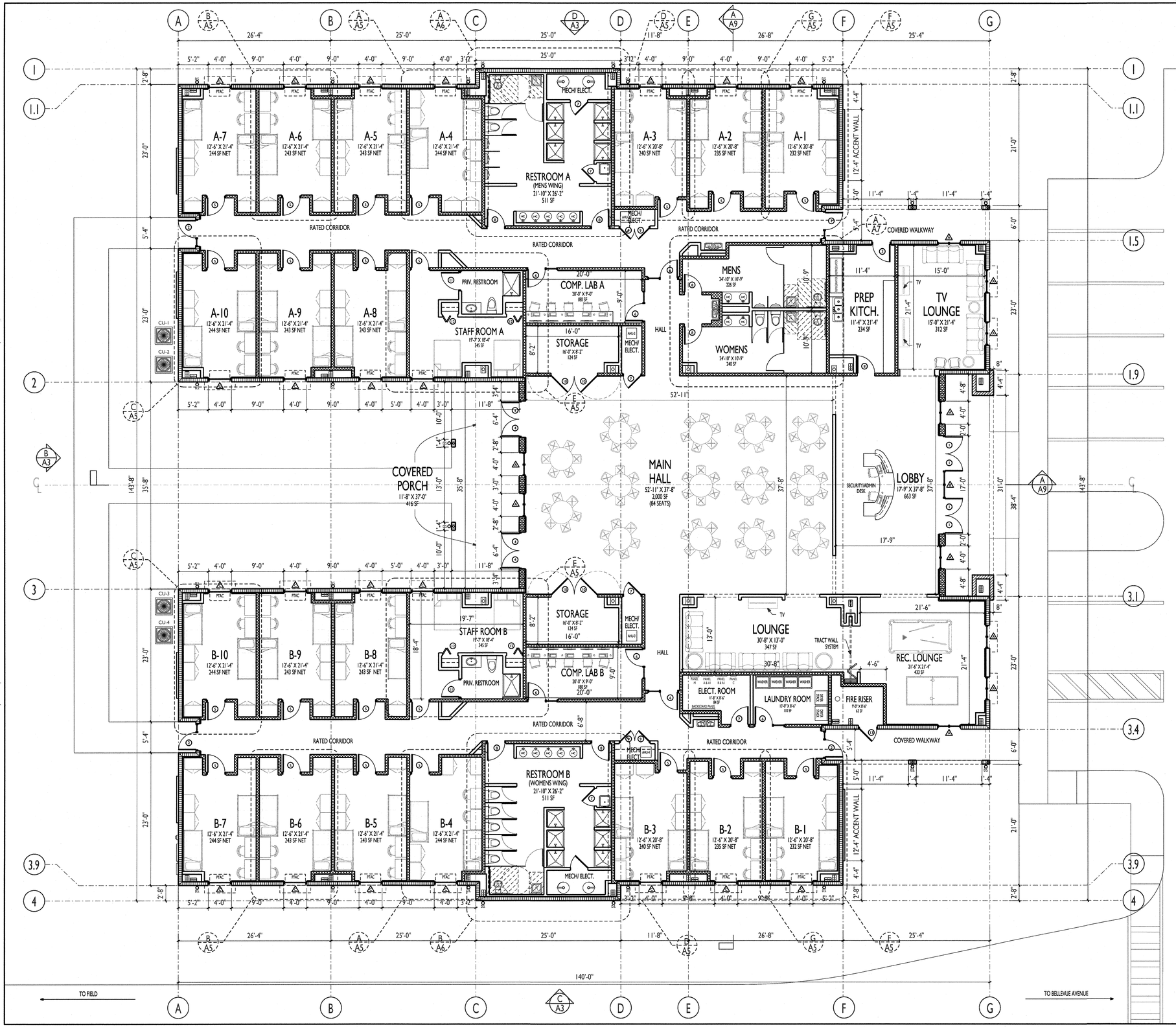

WALL TYPE LEGEND

- 8" CMU EXT WALL W/ 5/8" GYP. BOARD OVER 3/4" P.T. FURRING & SUPER R PLUS RADIANT BARRIER (R-VALUE 5.1)
- 12" CMU EXT WALL W/ 5/8" GYP. BOARD OVER 3/4" P.T. FURRING & SUPER R PLUS RADIANT BARRIER (R-VALUE 5.1)
- UL U419 INTERIOR 1 HR RATED WALL 3 5/8" 25 G MTL STUDS @ 16" O.C. W/ 5/8" GYP BOARD EACH SIDE
- INTERIOR NON-RATED WALL 3 5/8" 20 G MTL STUDS @ 24" O.C. W/ 5/8" GYP BOARD EACH SIDE
- EXTERIOR NON-RATED WALL 3 5/8" 20 G MTL STUDS @ 24" O.C. W/ DENZ GLASS FINISH

SYMBOL LEGEND

- (1) DOOR TAG (REFER TO SCHEDULE SHEET A12)
- (A) WINDOW TAG (REFER TO SCHEDULE SHEET A12)
- METAL BUILDING COLUMNS (REFER TO STRUCT. & MTL BLDG PKG)
- D.S. 6" DIA DOWNSPOUT (TO BE TIED TO CIVIL STORMWATER)

PROPOSED PLUMBING FIXTURE SCHEDULE

FIXTURE	MEN	WOMEN	UNISEX
WATER CLOSET	4	9	2
LAV.	9	9	2
URINAL	5	0	0
SHOWERS	6	6	2
3 BASIN SINK	0	0	1
MOP SINK	0	0	2
WATER FOUNTAIN (HI-LOW)	0	0	3
HAND SINK	0	0	0

GROSS AREA CALCULATION (80 BED UNIT)

A/C SPACE	
STUDENT RESIDENCES (20) @ +/- 240-290 SF EA. =	5,530 SF
STAFF RESIDENCES (2) @ +/- 390 SF EA. =	780 SF
GANG BATHROOMS (2) @ +/- 628 SF EA. =	1,256 SF
MAIN HALL RESTROOMS (2) @ +/- 256 SF EA. =	514 SF
COMPUTER LABS (2) @ +/- 195 SF EA. =	390 SF
RATED CORRIDORS (2) @ +/- 1,079 SF EA. =	2,155 SF
STORAGE, MECH/ELECT., FIRE RISER	576 SF
PREP KITCHEN	274 SF
LAUNDRY	122 SF
MAIN HALL/OFFICES	4,054 SF
	15,651 SF
NON-AC SPACE	
COVERED PORCHES/WALKWAYS	1,062 SF
TOTAL UNDER ROOF =	16,713 SF

A2 PROPOSED FLOOR PLAN

DORM BLDG. SCALE: 1/8" = 1'-0"

GENERAL NOTES:

ALL DIMENSIONS ARE TO FINISH FACE UNLESS NOTED OTHERWISE
ALL GENERAL & SUB-CONTRACTORS TO FIELD VERIFY ALL DIMENSIONS, ELECTRICAL, WATER, SEWER AND GAS SERVICE LOCATIONS.
ALL WORK MUST COMPLY WITH THE 2017 EDITION (EXPOSURE "D") OF THE FLORIDA BUILDING CODE SECT. 1609/ 140 MPH WIND LOAD AND THE FLORIDA ACCESSIBILITY CODE FOR BUILDING CONSTRUCTION
ALL DOOR & WINDOW OPENINGS TO MEET OR EXCEED DESIGN PRESSURE RANGE THE BUILDING RISK CATEGORY IS "II"
INTERNAL PRESSURE COEFFICIENT IS .18 IN ACCORDANCE WITH ASCE 7-10
ALL GLAZING IS TO BE NON-IMPACT RESISTANT

© COPYRIGHT 2019 BPF DESIGN INCORPORATED

REVISIONS

DEVELOPMENT REVIEW
City of Daytona Beach
APPROVAL OF: SP
DATE: _____ FILE: _____

APPROVED
JAN 30 2020
DEVELOPMENT SERVICES
City of Daytona Beach

DME SPORTS HOUSING COMPLEX

OWNER/REP.: MIKE PANAGGIO, DIRECT MAIL EXPRESS, 2441 BELLEVUE AVENUE, DAYTONA BEACH, FL. 32114 (386)271-3924
PROJECT LOCATION: 2501 BELLEVUE AVENUE, DAYTONA BEACH, FL. 32114
GENERAL CONTRACTOR: TO BE DETERMINED

BPF DESIGN INCORPORATED
Building Design and Architecture
AA 26001108
BRIAN P. FREDLEY, ASSOC. AIA, PROJECT MANAGER
DALLAS B. PEACOCK, AIA, ARCHITECT
AR 0009706
207 FAIRVIEW AVENUE, DAYTONA BEACH, FL 32114
PH: (386) 257-0502 FX: (386) 257-1050
E-MAIL: bfredley@bpfdesign.com WEBSITE: bpfdesign.com

PROPOSED FLOOR PLAN

DRAWN BY: TBM	CHECKED BY: DBP & BPF
DATE: OCTOBER 18, 2019	SHT NO. A2
SCALE: 1/8"=1'-0"	

0 2' 6 14' 20'

ARCHITECT'S / ENGINEER'S SEAL

Digitally signed by Dallas B. Peacock
Date: 2020.01.23 12:36:45 -05'00'

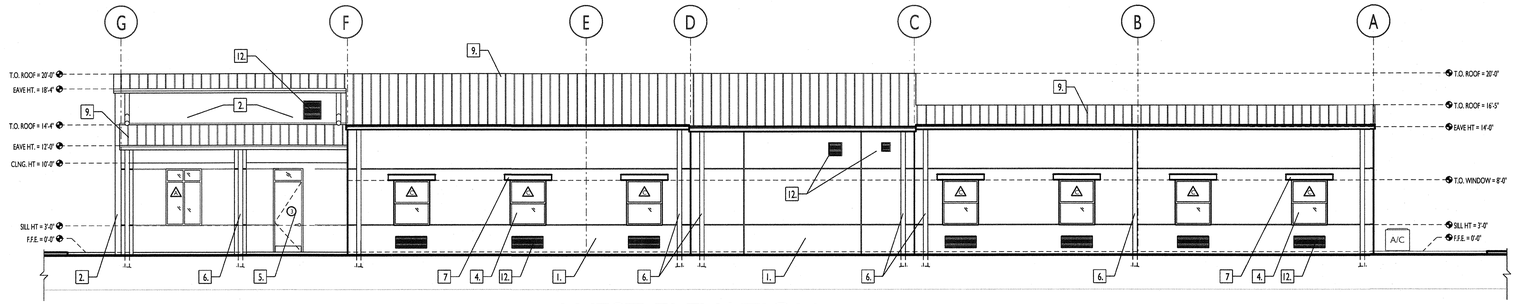

D / A3 WEST ELEVATION

SIDE FACADE SCALE: 1/8" = 1'-0"

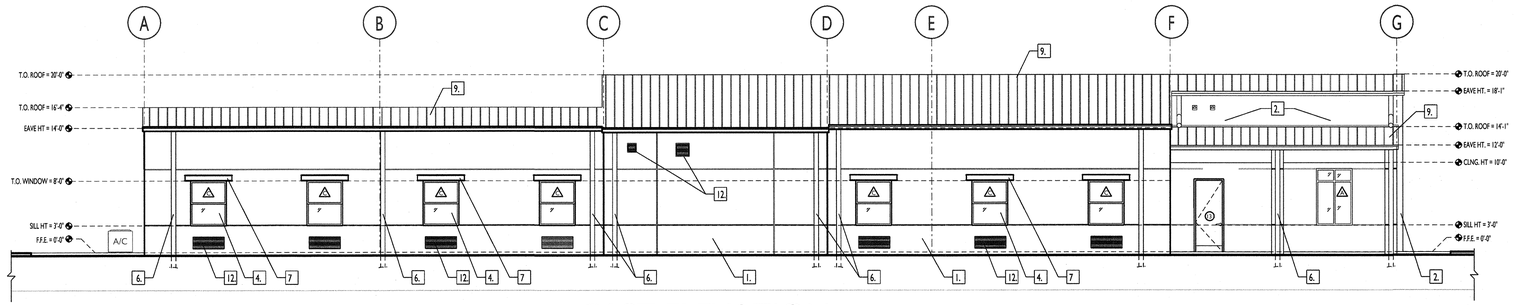

C / A3 EAST ELEVATION

SIDE FACADE SCALE: 1/8" = 1'-0"

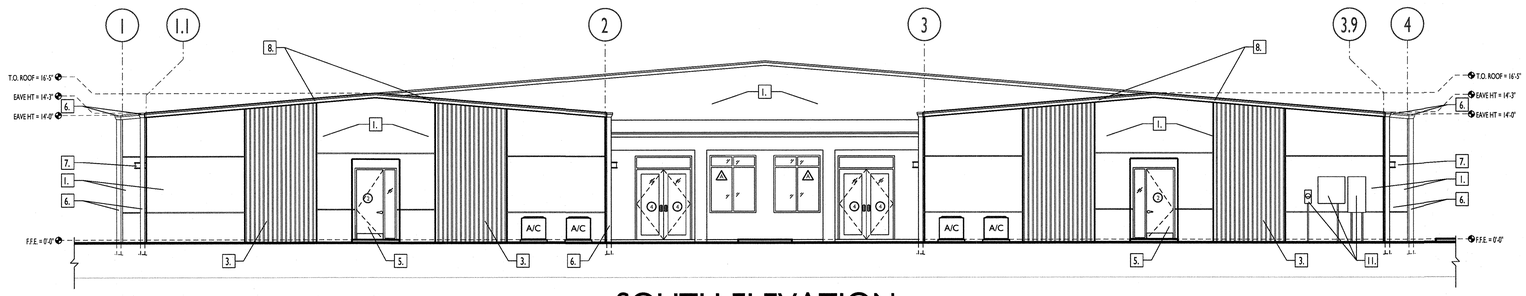

B / A3 SOUTH ELEVATION

REAR FACADE SCALE: 1/8" = 1'-0"

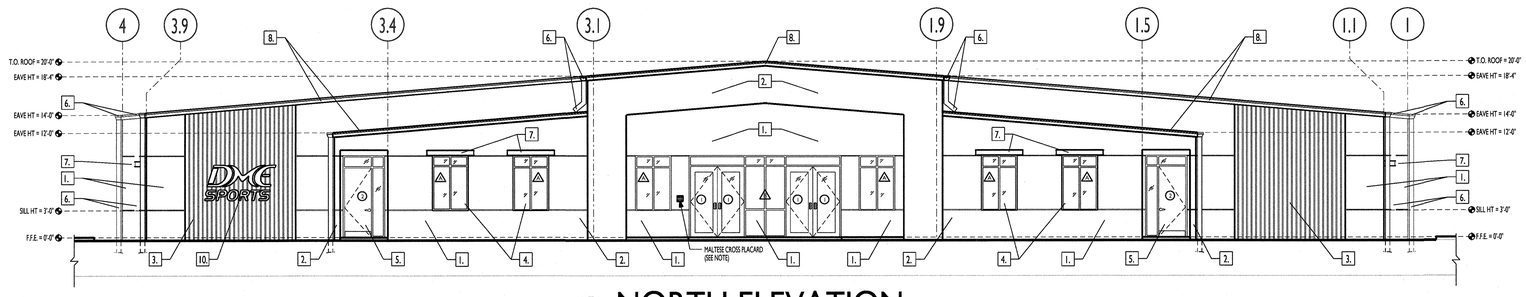

A / A3 NORTH ELEVATION

FRONT FACADE SCALE: 1/8" = 1'-0"

DEVELOPMENT REVIEW
City of Daytona Beach
APPROVAL OF: SP
DATE: _____ FILE: _____

APPROVED
JAN 30 2020
DEVELOPMENT SERVICES
City of Daytona Beach

MALTESE CROSS PLACARD NOTE:

8"
8"

FLORIDA STATE STATUTE 633.222 REQUIRES THE INSTALLATION OF ONE 8" X 8" LIGHTWEIGHT RED ROOF TRUSS SIGN MALTESE CROSS WITH THE INSET OF "R" MOUNTED APPROXIMATELY 24 INCHES TO THE LEFT OF MAIN ENTRANCE AND 4 - 6 FEET ABOVE GRADE, WALKING SURFACE, OR FINISHED FLOOR.

BUILDING / MATERIAL COLOR SCHEDULE

	BUILDING ELEMENT	MATERIAL	SPECIFIED COLOR
1.	MAIN WALL	CMU BLOCK W/ STUCCO FINISH	SW 7551- GREEK VILLA
2.	ACCENT WALL	CMU BLOCK W/ STUCCO FINISH	SW 6966- BLUEBLOOD
3.	ACCENT WALL	CORRUGATED MTL. SIDING	BERRIDGE- AWARD BLUE
4.	GLAZING (WINDOWS & DOORS)	LOW E, TINTED GLASS	BY MANUF.
5.	MAN DOORS	HOLLOW MTL. EXT. DOOR	SW 7551- GREEK VILLA
6.	GUTTERS & DOWNSPOUTS	PVC.	SW 6966- BLUEBLOOD
7.	WINDOW CANOPIES	PREFAB. MTL. AWNING	SW 6966- BLUEBLOOD
8.	ROOF FLASHING	CONC. TILTWALL W/ TEXTURE FINISH	MANUF. WHITE
9.	ROOF	STANDING SEAM MTL. ROOF	BERRIDGE- SHASTA WHITE
10.	BUILDING SIGNAGE	T.B.D.	WHITE
11.	FPL METER, WALL EQUIP.	MATCH TO WALL	SW 7551- GREEK VILLA
12.	MECH. LOUVERS/GRILLES	MATCH TO WALL	REF. TO ELEVS.

GENERAL NOTES:

ALL DIMENSIONS ARE TO FINISH FACE UNLESS NOTED OTHERWISE
ALL GENERAL & SUB-CONTRACTORS TO FIELD VERIFY ALL DIMENSIONS, ELECTRICAL, WATER, SEWER AND GAS SERVICE LOCATIONS.
ALL WORK MUST COMPLY WITH THE 2017 EDITION (EXPOSURE "D") OF THE FLORIDA BUILDING CODE SECT. 1609/ 140 MPH WIND LOAD AND THE FLORIDA ACCESSIBILITY CODE FOR BUILDING CONSTRUCTION
ALL DOOR & WINDOW OPENINGS TO MEET OR EXCEED DESIGN PRESSURE RANGE
THE BUILDING RISK CATEGORY IS "II"
INTERNAL PRESSURE COEFFICIENT IS .18 IN ACCORDANCE WITH ASCE 7-10
ALL GLAZING IS TO BE NON-IMPACT RESISTANT

© COPYRIGHT 2019 BPF DESIGN INCORPORATED

REVISIONS

1	

DME SPORTS HOUSING COMPLEX

OWNER/REP.: MIKE PANAGGIO, DIRECT MAIL EXPRESS, 2441 BELLEVUE AVENUE, DAYTONA BEACH, FL 32114 (386)271-3924
PROJECT LOCATION: 2501 BELLEVUE AVENUE, DAYTONA BEACH, FL 32114
GENERAL CONTRACTOR: TO BE DETERMINED

BPF DESIGN INCORPORATED
Building Design and Architecture
AA 26001108
BRIAN P. FREDLEY, ASSOC. AIA, PROJECT MANAGER
DALLAS B. PEACOCK, AIA, ARCHITECT
AR 0009706
207 FAIRVIEW AVENUE, DAYTONA BEACH, FL 32114
PH: (386) 257-0502 FX: (386) 257-1050
E-MAIL: bfredley@bpfdesign.com WEBSITE: bpfdesign.com

BUILDING ELEVATIONS

DRAWN BY: TBM	CHECKED BY: DBP & BPF
DATE: OCTOBER 18, 2019	SHT NO. A3
SCALE: 3/16"=1'-0"	

0 1' 4' 10' 12'

ARCHITECT'S / ENGINEER'S SEAL

Digitally signed by Dallas B. Peacock
Date: 2020.01.23 12:37:38 -05'00'

Boundary, Topographical, Tree & Right of Way Survey

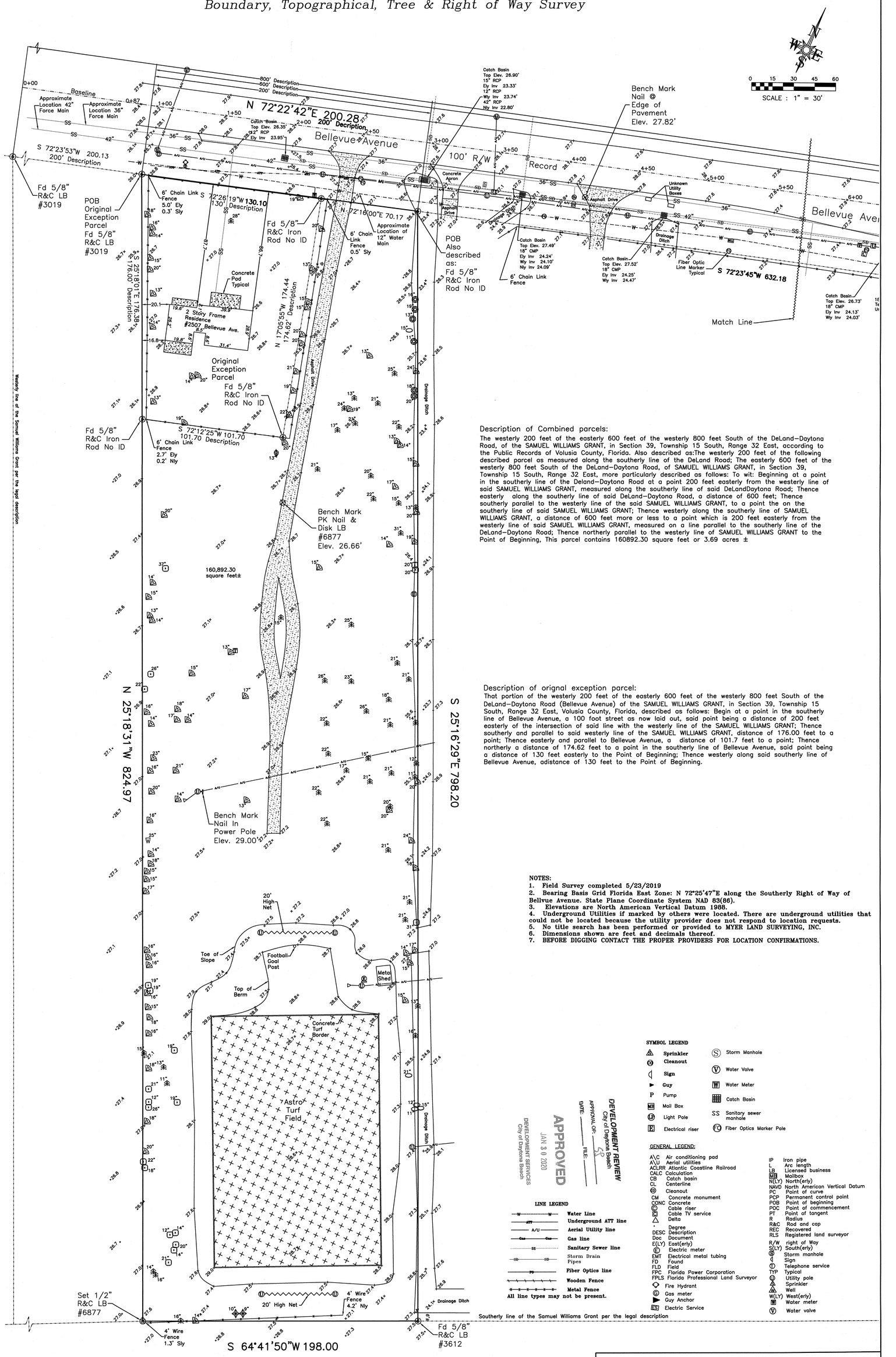

Description of Combined parcels:

The westerly 200 feet of the easterly 600 feet of the westerly 800 feet South of the DeLand–Daytona Road, of the SAMUEL WILLIAMS GRANT, in Section 39, Township 15 South, Range 32 East, according to the Public Records of Volusia County, Florida. Also described as:The westerly 200 feet of the following described parcel as measured along the southerly line of the DeLand Road; The easterly 600 feet of the westerly 800 feet South of the DeLand–Daytona Road, of SAMUEL WILLIAMS GRANT, in Section 39, Township 15 South, Range 32 East, more particularly described as follows: To wit: Beginning at a point in the southerly line of the Deland–Daytona Road at a point 200 feet easterly from the westerly line of said SAMUEL WILLIAMS GRANT, measured along the southerly line of said DeLandDaytona Road; Thence easterly along the southerly line of said DeLand–Daytona Road, a distance of 600 feet; Thence southerly parallel to the westerly line of the said SAMUEL WILLIAMS GRANT, to a point the on the southerly line of said SAMUEL WILLIAMS GRANT; Thence westerly along the southerly line of SAMUEL WILLIAMS GRANT, a distance of 600 feet more or less to a point which is 200 feet easterly from the westerly line of said SAMUEL WILLIAMS GRANT, measured on a line parallel to the southerly line of the DeLand–Daytona Road; Thence northerly parallel to the westerly line of SAMUEL WILLIAMS GRANT to the Point of Beginning, This parcel contains 160892.30 square feet or 3.69 acres ±

Description of orignal exception parcel:

That portion of the westerly 200 feet of the easterly 600 feet of the westerly 800 feet South of the DeLand–Daytona Road (Bellevue Avenue) of the SAMUEL WILLIAMS GRANT, in Section 39, Township 15 South, Range 32 East, Volusia County, Florida, described as follows: Begin at a point in the southerly line of Bellevue Avenue, a 100 foot street as now laid out, said point being a distance of 200 feet easterly of the intersection of said line with the westerly line of the SAMUEL WILLIAMS GRANT; Thence southerly and parallel to said westerly line of the SAMUEL WILLIAMS GRANT, distance of 176.00 feet to a point; Thence easterly and parallel to Bellevue Avenue, a distance of 101.7 feet to a point; Thence northerly a distance of 174.62 feet to a point in the southerly line of Bellevue Avenue, said point being a distance of 130 feet easterly to the Point of Beginning; Thence westerly along said southerly line of Bellevue Avenue, adistance of 130 feet to the Point of Beginning.

NOTES:

1. **Field Survey completed 5/23/2019**
2. **Bearing Basis Grid Florida East Zone: N 72°25'47"E along the Southerly Right of Way of Bellvue Avenue. State Plane Coordinate System NAD 83(86).**
3. **Elevations are North American Vertical Datum 1988.**
4. **Underground Utilities if marked by others were located. There are underground utilities that could not be located because the utility provider does not respond to location requests.**
5. **No title search has been performed or provided to MYER LAND SURVEYING, INC.**
6. **Dimensions shown are feet and decimals thereof.**
7. **BEFORE DIGGING CONTACT THE PROPER PROVIDERS FOR LOCATION CONFIRMATIONS.**

TREE LEGEND:

- OAK
- PINE
- PALM
- HACKBERRY
- SWEETGUM
- CHINABERRY
- CHINESE TALLOW
- AUSTRALIAN PINE

NOTE: Number beside tree indicates diameter at 4.5' Above Grade.

All trees may not be present.

SYMBOL LEGEND

Sprinkler	Storm Manhole
Cleanout	Water Valve
Sign	Water Meter
Guy	Catch Basin
Pump	Sanitary sewer manhole
Mail Box	Fiber Optics Marker Pole
Light Pole	
Electrical riser	

GENERAL LEGEND:

A\C Air conditioning pad	IP Iron pipe
A\U Aerial utilities	L Arc length
ACLRR Atlantic Coastline Railroad	LB Licensed business
CALC Calculation	MB Mailbox
CB Catch basin	N(LY) North(erly)
CL Centerline	NAVD North American Vertical Datum
Cleanout	PC Point of curve
CM Concrete monument	PCP Permanent control point
CONC Concrete	POB Point of beginning
Cable riser	POC Point of commencement
Cable TV service	PT Point of tangent
Delta	R Radius
° Degree	R&C Rod and cap
DESC Description	REC Recovered
Doc Document	RLS Registered land surveyor
E(LY) East(erly)	R/W right of Way
Electric meter	S(LY) South(erly)
EMT Electrical metal tubing	Storm manhole
FD Found	Sign
FLD Field	Telephone service
FPC Florida Power Corporation	TYP Typical
FPLS Florida Professional Land Surveyor	Utility pole
Fire Hydrant	Sprinkler
Gas meter	Well
Guy Anchor	W(LY) West(erly)
Electric Service	Water meter
	Water valve

LINE LEGEND

- Water Line
- Underground ATT line
- Aerial Utility line
- Gas line
- Sanitary Sewer line
- Storm Drain Pipes
- Fiber Optics line
- Wooden Fence
- Metal Fence

All line types may not be present.

DEVELOPMENT REVIEW
City of Daytona Beach
APPROVAL OF: SK
DATE: FILE:

APPROVED
JAN 9 0 2020
DEVELOPMENT SERVICES
City of Daytona Beach

Digitally signed by Michael M. Myer
Date: 2019.10.31 09:46:21 -04'00'

MICHAEL M. MYER LICENSE No. 4006 STATE OF FLORIDA PROFESSIONAL SURVEYOR & MAPPER

MICHAEL M. MYER (Not valid without the signature and original raised seal of a Florida licensed surveyor and mapper) 4006 LICENSED embossed with surveyor's seal and

Survey Exclusively Prepared for:
Mike Panaggio
DME Holdings, LLC

MYER LAND SURVEYING, INC.
LICENSED BUSINESS #6877
MICHAEL M. MYER #LS 4006
PROFESSIONAL LAND SURVEYOR
316 RIDGEWOOD AVENUE HOLLY HILL, FLORIDA 32117
386 255-6304 Phone MyerLandSurveying@Gmail.com

Job Number 19177 Crd #97367
FB 331 @ 41-48,
267 @ 17-22

DATE: 6/10/19 | SCALE: 1"=100' | SHEET 1 of 2

Boundary, Topographical, Tree & Right of Way Survey
Sheet 2 of 2

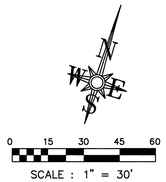

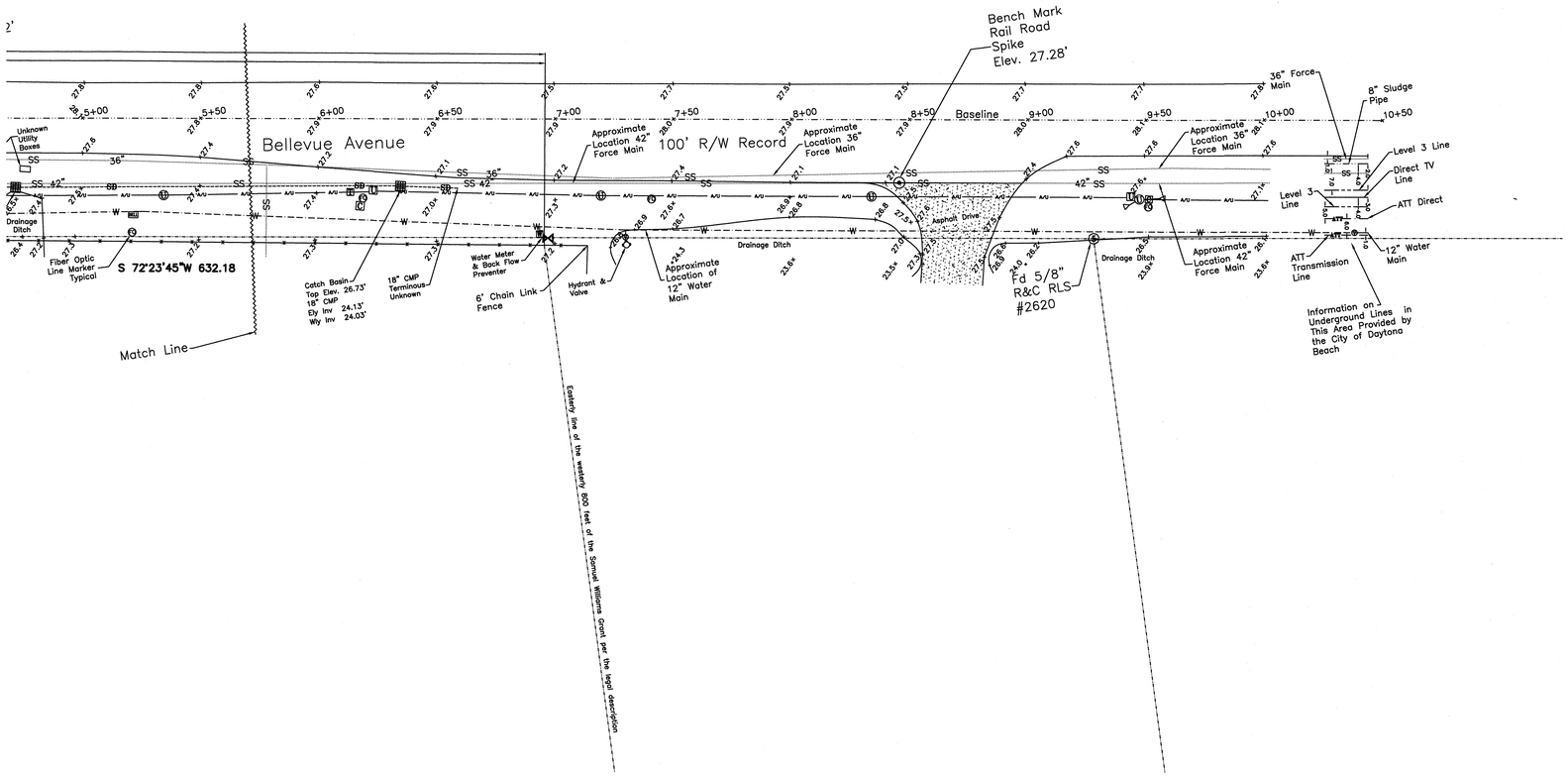

TREE LEGEND:

- OAK
- PINE
- PALM
- HACKBERRY
- SWEETGUM
- CHINABERRY
- CHINESE TALLOW
- AUSTRAILIAN PINE

NOTE:

Number beside tree indicates diameter at 4.5' Above Grade.

All trees may not be present.

LINE LEGEND

- Water Line
- Underground ATT line
- Aerial Utility line
- Gas line
- Sanitary Sewer line
- Storm Drain Pipes
- Fiber Optics line
- Wooden Fence
- Metal Fence

All line types may not be present.

GENERAL LEGEND:

A\C Air conditioning pad	IP Iron pipe
A\U Aerial utilities	L Arc length
ACLRR Atlantic Coastline Railroad	LB Licensed business
CALC Calculation	MB Mailbox
CB Catch basin	N(LY) North(erly)
CL Centerline	NAVD North American Vertical Datum
CO Cleanout	PC Point of curve
CM Concrete monument	PCP Permanent control point
CONC Concrete	POB Point of beginning
CR Cable riser	POC Point of commencement
CTV Cable TV service	PT Point of tangent
Δ Delta	R Radius
° Degree	R&C Rod and cap
DESC Description	REC Recovered
Doc Document	RLS Registered land surveyor
E(LY) East(erly)	R/W right of Way
EM Electric meter	S(LY) South(erly)
EMT Electrical metal tubing	SD Storm manhole
FD Found	Sign
FLD Field	T Telephone service
FPC Florida Power Corporation	TYP Typical
FPLS Florida Professional Land Surveyor	UP Utility pole
Fire Hydrant	Sprinkler
G Gas meter	Well
Guy Anchor	W(LY) West(erly)
ES Electric Service	WM Water meter
	V Water valve

SYMBOL LEGEND

Sprinkler	S Storm Manhole
CO Cleanout	V Water Valve
Sign	WM Water Meter
Guy	Catch Basin
P Pump	SS Sanitary sewer manhole
MB Mail Box	FO Fiber Optics Marker Pole
Light Pole	
E Electrical riser	

NOTES:

1. **Field Survey completed 5/23/2019**
2. **Bearing Basis Grid Florida East Zone: N 72°25'47"E along the Southerly Right of Way of Bellvue Avenue. State Plane Coordinate System NAD 83(86).**
3. **Elevations are North American Vertical Datum 1988.**
4. **Underground Utilities if marked by others were located. There are underground utilities that were not located because the utility provider will not respond to Surveyor's location request.**
5. **No title search has been performed or provided to MYER LAND SURVEYING, INC.**
6. **Dimensions shown are feet and decimals thereof.**
7. **BEFORE DIGGING CONTACT THE PROPER PROVIDERS FOR LOCATION CONFIRMATIONS.**

Job Number 19177 Crd #97367
FB 331 @ 41–48,
267 @ 17–22

MICHAEL M. MYER, FL PSM LS4006
MYER LAND SURVEYING, INC., LICENSED BUSINESS #6877
(Not valid unless signed and embossed with surveyor's seal and accompanied by sheet 1.)

Survey Exclusively Prepared for:
Mike Panaggio
DME Holdings, LLC

MYER LAND SURVEYING, INC.
LICENSED BUSINESS #6877
MICHAEL M. MYER #LS 4006
PROFESSIONAL LAND SURVEYOR
316 RIDGEWOOD AVENUE HOLLY HILL, FLORIDA 32117
386 255–6304 Phone MyerLandSurveying@Gmail.Com

DATE: 6/10/19	SCALE: 1"=30'	SHEET 2 of 2

DEVELOPMENT REVIEW
City of Daytona Beach
APPROVAL OF: SP
DATE: _____ FILE: _____

APPROVED
JAN 30 2020
DEVELOPMENT SERVICES
City of Daytona Beach